Refiner Acid Neutralizer
Product Manual

www.diamondh20 | 800-236-8931 | N1022 Quality Drive, Greenville WI 54942

Inspect the packaging of the equipment to confirm that nothing was damaged during shipping. (Figure 1)

Figure 1: Original Packaging of DCS6 Twin Tank System
This is how the packages will generally arrive

Remove the resin tank(s) and valve(s) from the packaging.
Make sure everything is included and without damage.

_____ 1) Control Valve (Figure 2)

_____ 2) Media Tank (Figure 3)

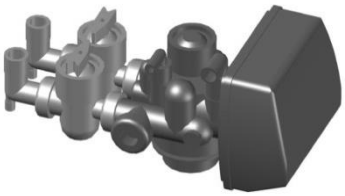

Figure 2: Control Valve

_____ 3) Correct Amount of Media
(from Model and Media Requirements Table on page 2)

Acid Neutralizer (AN)

Calcite is a crushed and screened white marble media used to neutralize acidic or low pH water. Acidic waters, on contact with Calcite, slowly dissolve the calcium carbonate media to raise the pH. The sacrificial media will have to be periodically added as it dissolves. Calcite increases hardness and a water softener may have to be added after the neutralizing filter.

Filters using Calcite work best when the alkalinity is less than 150 PPM. Consult the factory if the influent water alkalinity is higher.

Calcite filters will provide 30 - 40 micron filtration.

Figure 3: Media Tank

Call Diamond H2O right away if anything is missing. Contact the freight company **immediately** if anything is damaged. Diamond H2O will not be liable for any damage received after shipping.

Packaged By: _____ Date: _____

Received By: _____ Date: _____

Table of Contents

Table 1: Media Requirements.

Model Number	DCF6-100-100-AN	DCF6-150-100-AN	DCF6-200-100-AN	DCF6-250-100-AN
Tank Size	10” X 44”	10” x 54”	12” x 52”	13” X 54”
Filter Media	1	1.5	2	2.5
Gravel #20	10	10	20	25
Inlet/Outlet	1” NPT	1” NPT	1” NPT	1” NPT
Drain	3/4” NPT	3/4” NPT	3/4” NPT	3/4” NPT
Service Rate	3 GPM	5 GPM	8 GPM	10 GPM
Backwash Rate	5.3 GPM	5.3 GPM	6.5 GPM	7.5 GPM
Power	120 V, 1 PH	120 V, 1 PH	120 V, 1 PH	120 V, 1 PH

Table 2: Spare Parts List

Item	Part Number
Battery, 3 volt lithium coin cell	Type 2032
Motor Assembly	V3107-01
PC Board 4-Digit	V3818TC
AC Adaptor 110V-12V	V3186
O-ring 228	V3135
O-ring 337	V3180
O-ring 215 (for 1” distributor tube)	V3105
O-ring 219 (for 1.32” distributor tube)	V3358
Blue Funnel (For 2.5” diameter tanks)	97-0014-PL
Black Funnel (For 4.0” diameter tanks)	97-0015-PL

1. Obtain the required tools listed below:

A. Utility Knife
B. Pliers
C. Phillips Screwdriver
D. Hammer

2. Place the tanks near a water source.

A. Select a position near a floor drain that has adequate carrying capacity to handle the backwash flow rate. Refer to the specification Table 1 on page 2 for the appropriate backwash flow rate.
B. Place the softener(s) and brine tank on a level, firm foundation, like concrete.
C. **Determine the "front" of the tank:**
   a. Make sure that the distributer riser is flush with the top of the resin tank.
   b. Before placing any water, gravel, or resin in the resin tank, screw in a control valve to the point where it is secure. The valve does not need to be forced on, but should be snug.
   c. Mark the "front" of each resin tank (shown in Figure 4) with either a marker or tape. The front of the resin tank is determined by the location of the face of the control valve once it has been secured to the face of the control valve. Make sure that the system is positioned in a way that the plumbing can be installed.

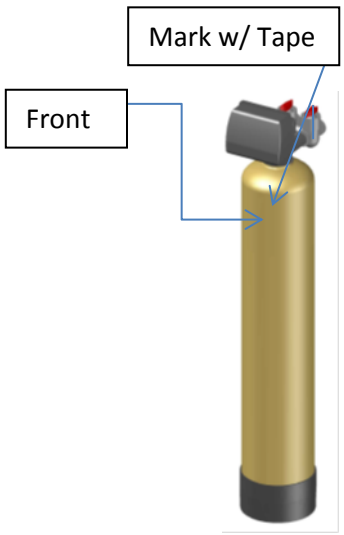

Figure 4: Resin Tank

D. ***Before Filling the Tanks***:
   a. Remove the valve(s)
   b. Ensure that the front of the tank is positioned correctly. Once filled, the resin tank will be very difficult to move.
   c. Cover the exposed end of the distributor riser to make sure no resin gets inside. Covering up the riser with duct tape is one option, shown in Figure 4.
   d. Obtain a funnel to assist placing the resin in the resin tank. (A funnel designed specifically for our resin tanks can be ordered from Diamond H2O Conditioning. The part numbers for the two types of funnels can be found in Table 2 on Page 2.)

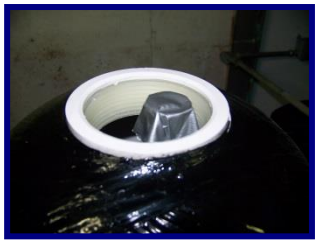

Figure 4: How to Block Distributer Tube

3. Setting up the tank

A. Fill the tank up to about 30% full of water.

B. Check the system specifications (Table 1) on page 2 to determine the correct amount of gravel and resin needed for your system.

C. Position the distributor tube so it is in the center of the tank, shown in Figure 5.

Figure 5: Centered Distributer Tube

D. **SLOWLY**, pour the correct amount of support gravel into the tank without getting any gravel into the distributer tube.

   a. CAUTION: The distributor system is made of PVC and will break if the gravel is poured in too quickly.

E. When all of the support gravel provided is in the tank, carefully rock the tank back and forth to level the gravel. Confirm that the gravel is covering the distributor basket or radials. If not contact Diamond H2O.

F. **SLOWLY**, pour the correct amount of media into the tank. Again, try to keep the media level by carefully rocking the tank back and forth. The correct amount of media necessary for your model can be found in Table 1.

G. Fill the rest of the tank with water to prevent air from getting in the tanks and potentially losing media.

H. Verify that there is a large O-ring on the control valve adapter base.

I. Place the control valve on the tank, making sure that the distributor tube fits into the bottom of the control valve.

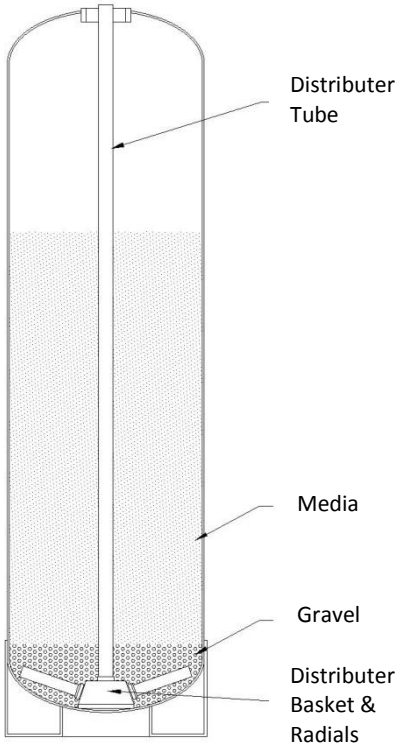

Figure 10: Resin Tank Diagram

J. Tighten the control valve onto the tank to the point that it is snug. The finished tank is shown in Figure 10. Double check that the valve is in a correct position to be able to install the plumbing.

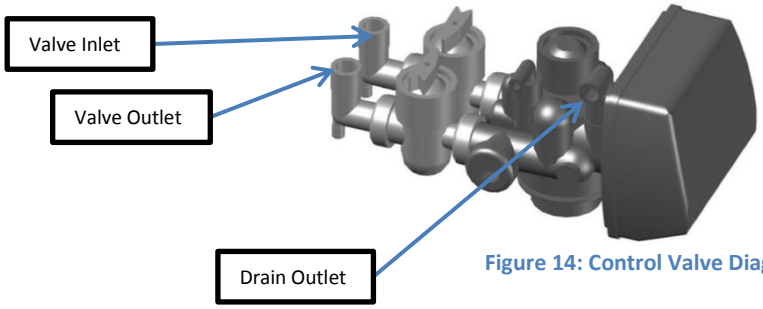

Figure 14: Control Valve Diagram

4. Connect the Valves to the Water Source

A. Requirements for Source Water
   a. Water Pressure: 25-100psi
   b. Water Temperature: 33-100°F
   c. Firm Level Surface for Tank(s)
   d. 115/120V, 60Hz uninterrupted outlet

B. Pipe or tube a line from the Control Valve Drain (Figure 14) to the drain.

Do:

- Minimize the distance between the drain and water filter
- Use rigid piping for the drain line

DO NOT

- install a valve in this line
- use a pipe smaller than one inch
- make a direct connection to the drain
    - Provide an air gap at least four times the diameter of the drain pipe to conform to sanitation codes and be able to observe the drain flow.
- use an excessive amount of elbows in the plumbing
- use Vaseline, oils, other hydrocarbon lubricants, or spray silicon anywhere
- use pipe dope or other sealants on threads

C. Connect the facility plumbing to the control valve inlet following all local codes.
D. Temporarily run the control valve outlet to the drain.

Note: Make sure all piping is free of thread chips and other foreign matter.

5. Electrical

The Water Filter use requires single-phase 110 volt, 1 phase, 60 hertz, and 5 amp service; it is equipped with a 10 foot electrical cord and a wall plug-in transformer.

NOTE: We recommend that a licensed electrician install your system in accordance with local and national electrical codes.

WARNING: To reduce the risk of electrical shock, the incoming power supply must include a protective earth ground.

NOTE: Some Filters are supplied with an optional micro-switch that closes during Backwashing. The wires with connectors can be located coming out the back of the control valve.

6. Start up the system for the first time.

A. Fill the tank with water.
   a. Manually put the control valve into regeneration by simultaneously the holding ▲ and ▼ and release (Section 11)
   b. A mixture of air and water will flow from the drain line.
   c. Slowly open the bypass valve's inlet to allow water to slowly enter the tank. (shown in figure 15)
   d. Once the tank is filled, only water will be coming out of the drain line. Put the system back into bypass operation. Run each step of the regen cycle for a few minutes.

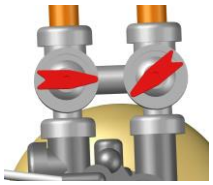

Figure 15:
Opening bypass valve's inlet

B. When no air is flowing through the drain line
   a. The tank is now filled with water.
   b. Wait until the system is finished regenerating or press ▼ repeatedly until the system stops regenerating.
   c. Open the bypass valve into normal operation (Figure 17)

C. Program the Valve.
   a. Most of the settings (OEM Settings) were pre-programed by Diamond H2O. However, all programmable functions are shown in section 9.

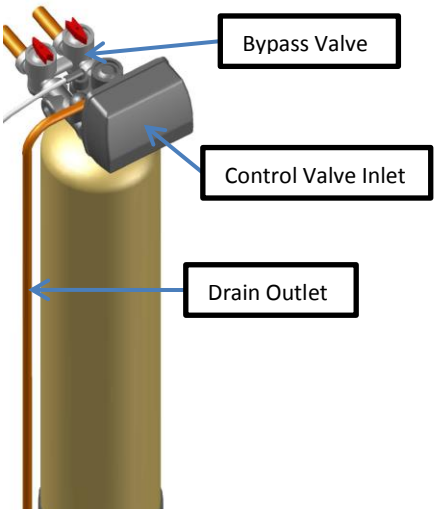

Figure 16: Finished System

7. Bypass Valve Operations

A. The red controls of the bypass valve can be turned 90° resulting in four modes of operation.

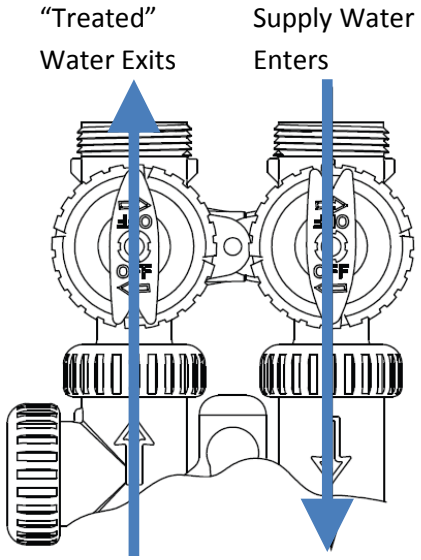

Figure 17: Normal Operation

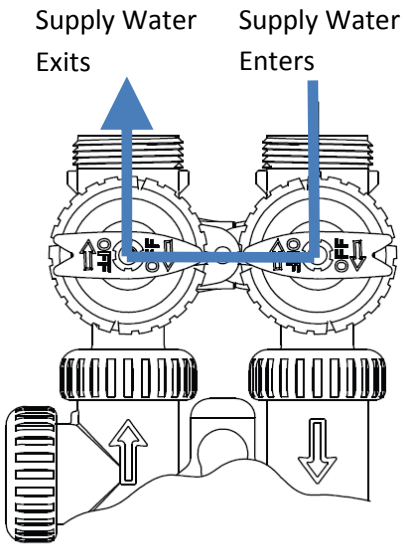

Figure 18: Bypass Operation

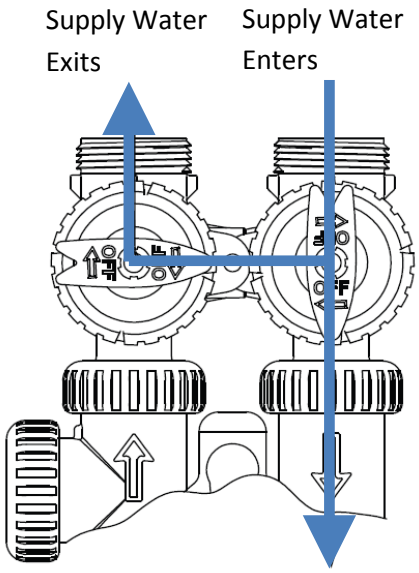

Figure 19: Diagnostic Mode

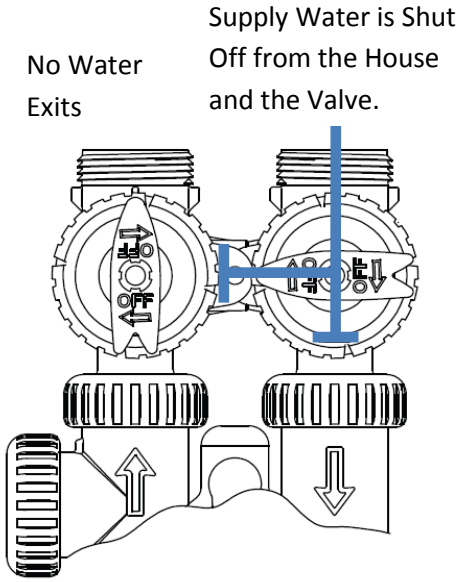

Figure 20: Shut Off Mode

8. Control Valve Functions

This glass filled Noryl1 (or equivalent) fully automatic control valve is designed as the primary control center to direct and regulate all cycles of a downflow regeneration water softener or filter. The time clock control valve can be set to perform downflow regeneration or simply backwash. The time clock control valve has two calendar options for regeneration frequency:

- An option where the user can choose the number of days (1-99) between each regeneration;
- A seven-day option where the user chooses which day(s) of the week a regeneration will occur.

The control valve is compatible with a variety of regenerants and resin cleaners. The control valve is capable of routing the flow of water in the necessary paths to regenerate or backwash water treatment systems. The injector regulates the flow of brine or other regenerants. The control valve regulates the flow rates for backwashing, rinsing, and the replenishing of treated water into a regenerant tank, when applicable.

The control valve uses no traditional fasteners (e.g. screws); instead clips, threaded caps and nuts and snap type latches are used. Caps and nuts only need to be firmly hand tightened because radial seals are used. Tools required to service the valve include one small blade screw driver, one large blade screw driver, pliers and a pair of hands. A plastic wrench is available which eliminates the need for screwdrivers and pliers. Disassembly for servicing takes much less time than comparable products currently on the market. Control valve installation is made easy because the distributor tube can be cut ½" above to ½" below the top of tank thread. The distributor tube is held in place by an O-ring seal and the control valve also has a bayonet lock feature for upper distributor baskets.
The AC adapter comes with a 15 foot power cord and is designed for use with the control valve. The AC adapter is for dry location use only. The control valve maintains timekeeping for up to 8 hours if the power goes out and the battery is not depleted. After 8 hours, the only item that needs to be reset is the time of day; valve status and programming are permanently stored in the nonvolatile memory. If a power loss lasts less than 8 hours and the time flashes on and off, the time of day should be reset and the non-rechargeable battery should be replaced.

The user can initiate manual regeneration. The user has the option to request the manual regeneration at the delayed regeneration time or to have the regeneration occur immediately. Simultaneously press the ▲ and ▼ buttons to start a regeneration at the next delayed regeneration time. If a regeneration is to occur today an arrow will point to REGEN. For immediate regeneration, simultaneously press and hold the ▲ and ▼ buttons for three seconds.

When in regeneration, step through the different regeneration cycles by pressing the▲ or ▼ buttons.

9. Program the Valve

- To enter into the programming mode, press and hold the indicated buttons on the control valve for 3 seconds.
- When in operation, normal user displays show the time of day or days remaining before regeneration. When stepping through a procedure, if no buttons are pressed within five minutes the display returns to a normal user display. Any changes made prior to the five minute time out are incorporated.
- To quickly exit Installer Displays & Settings or OEM Setup, simultaneously press SET and ▼. Any changes made prior to the exit are incorporated.
- To reinitialize the control valve, check to make sure the valve is in the User Display. Then simultaneously press SET and ▼ or unplug power source plug (4-pin connector) on the circuit board, wait 3 seconds and plug back in.

A. Set the Clock

In the event of a power outage, time of day flashes, indicating that it needs to be reset. All other information will be stored in memory no matter how long the power outage. Please complete the steps as shown below.

a. Press "SET" for 3 seconds

b. Adjust hour with ▲ and ▼ buttons.

With 60 Hz line frequency detection on power-up, timekeeping is 12 hour with PM indicator. With 50 Hz line frequency detection on power-up, timekeeping is 24 hour without the PM indicator.

c. Press "SET"

d. Adjust minutes with ▲ and ▼ buttons.

e. Press "SET" to return to normal operation.

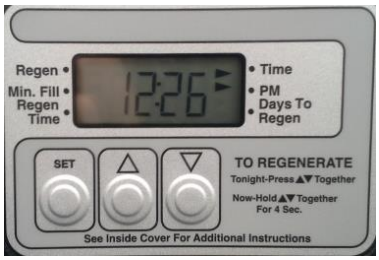

NOTE: The valve can be programmed to regenerate two ways shown in sections B and C. Only one of these settings can be active at one time and can be changed in the OEM settings (Section D)

B. [Default] Set Regeneration Time and Duration (1-99 Days Between Regeneration Option)

a. Press "SET" and ▲ for 3 seconds.

b. Set Regeneration Time Hour (time when regeneration will start).
Press "SET" for the next step.

c. Set Regeneration Time Minutes (time when regeneration will start).
Press "SET" for next step.

d. Set number of days between regeneration cycles (0-99) using ▲ or ▼ buttons.

e. Press "SET" to return to normal operation.

C. Set Regeneration Time and Days (7 Day Option)

a. Press "SET" and ▲ for 3 seconds.

b. Set Regeneration Time Hour (time when regeneration will start).
Press "SET" for the next step.

c. Set Regeneration Time Minutes (time when regeneration will start).
Press "SET" for next step.

d. Set Current Day (Codes shown in chart to right)
Press "SET" for next step.

Display		Day of Week
day 1	d1	Sunday
day 2	d2	Monday
day 3	d3	Tuesday
day 4	d4	Wednesday
day 5	d5	Thursday
day 6	d6	Friday
day 7	d7	Saturday

For steps e-j:

Use ▲ or ▼ until the arrow points to Regen (Shown Below for d1).

Press "SET" to move to the next step.

OFF

ON

e. Sunday Regeneration (d1)
f. Monday Regeneration (d2)
g. Tuesday Regeneration (d3)
h. Wednesday Regeneration (d4)
i. Thursday Regeneration (d5)
j. Friday Regeneration (d6)
k. Saturday Regeneration (d7)
l. Press "SET" to return to normal operation.

NOTE: If all arrows are turned off in d1-d7, the program will default to d7.

D. OEM Settings

Table 3 shows the time for the backwash, regenerative, and rinse cycles for the ten available programming options. Six different programs are available for a softener, one for a regenerative filter, and three programs for backwash only filters. When the control valve is used as a:

Softener: One or two backwashes occur and refill always occurs after the rinse cycle (P0 - P5)
Regenerative Filter: One backwash occurs and refill always occurs after the rinse cycle (P6)
Backwashing Filter: One backwash occurs (P7 through P9)

Table 3: Regeneration Cycles and Times for Different Programs

Program	All times in Minutes				
	C1 1st Backwash	C2 Regenerate	C3 2nd Backwash	C4 Rinse	C5 Fill
P0	3	50	3	3	1-99
P1	8	50	8	4	1-99
P2	8	70	10	6	1-99
P3	12	70	12	8	1-99
P4	10	50	Skipped	8	1-99
P5	4	50	Skipped	4	1-99
P6	12	6	Skipped	12	1-99
P7	6	Skipped	Skipped	4	Skipped
P8	10	Skipped	Skipped	6	Skipped
P9	14	Skipped	Skipped	8	Skipped

a. Press "SET" and ▲ for 3 seconds.
Press "SET" and ▲ for 3 seconds a second time.

b. Choose the desired program by pressing the ▲ or ▼ buttons. Prior to selecting a program, verify the correct valve body, main piston, regenerant piston, and stack are being used, and that the injector or injector plug(s) are in the correct locations. For this application (Acid Nuetralizer), **choose P7, P8, or P9**.

Press "SET" to move to the next step.

c. Set Type of regeneration using ▲ or ▼ buttons (1-99 Days or 7 Day).
- **1-99 Days**: Regeneration is determined by the number of days that have passed since the last regeneration scheduled.
- **7-Day**: Regeneration is scheduled for specific days of the week.

or

Press "SET" to move to the next step.

D. OEM Settings Continued…

d. Set Differential Pressure Switch On/Off
Use ▲ or ▼ to switch between the two choices. If a differential switch is not installed the settings in this display are ignored. Press SET to exit OEM system setup.

- A regeneration will occur immediately if no arrow points at Regen Time; or
- A regeneration will occur at the delayed regeneration hour if an arrow points at Regen Time.

NOTE:
A regeneration will be initiated or scheduled after the control has received a signal for two minutes to the DP Input (Item A).

A. Differential pressure switch connection
B. Motor wire connection
C. AC adapter wire connection

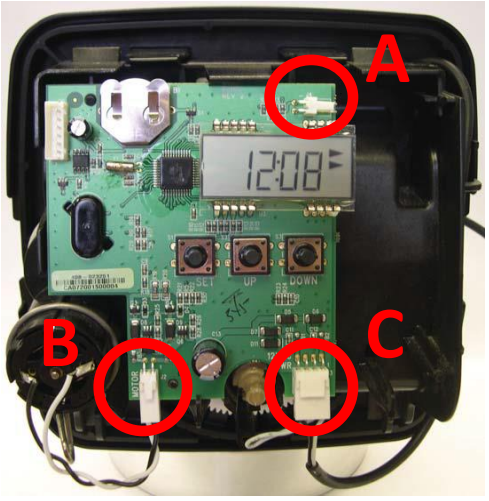

E. User Displays

a. General Operation

When the system is operating one of two displays will be shown.
Pressing ▲ or ▼ will alternate between the displays. One of the displays is always the current time of day. The second display is the days remaining until the next regeneration. If the days remaining are equal to one, a regeneration will occur at the next preset regeneration time. The user can scroll between displays as desired.

b. Regeneration Mode

Typically a system is set to regenerate at a time of low water usage. An example of a time with low water usage is when a household is asleep. If there is a demand for water when the system is regenerating, untreated water will be used.

When the system begins to regenerate, the display will change to the Regeneration Cycle Display to indicate the current regen cycle step and time remaining. An arrow will also point to Regen. The system will run through the steps automatically and will reset itself to provide treated water when the regeneration is completed.

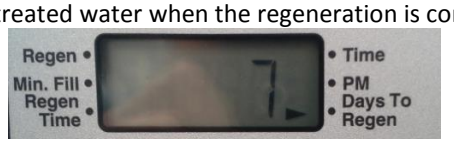

10. System Specifications

Model Number	DCF6-100-100-AN	DCF6-150-100-AN	DCF6-200-100-AN	DCF6-250-100-AN
Tank Size	10” X 44”	10” x 54”	12” x 52”	13” X 54”
Filter Media	1	1.5	2	2.5
Gravel #20	10	10	20	25
Inlet/Outlet	1” NPT	1” NPT	1” NPT	1” NPT
Drain	3/4” NPT	3/4” NPT	3/4” NPT	3/4” NPT
Service Rate	3 GPM	5 GPM	8 GPM	10 GPM
Backwash Rate	5.3 GPM	5.3 GPM	6.5 GPM	7.5 GPM
Power	120 V, 1 PH	120 V, 1 PH	120 V, 1 PH	120 V, 1 PH

11. Troubleshooting

A. Manual Regeneration

Sometimes there is a need to regenerate the system sooner than when the system calls for it, usually referred to as a manual regeneration. There may be a period of heavy water usage because of guests or a heavy laundry day.

To initiate a manual regeneration at the preset delayed regeneration time, simultaneously hold ▲ and ▼ and release. The arrow will point to the word Regen, if a regeneration is expected tonight. To cancel the regeneration simultaneously press ▲ and ▼ and release.

To initiate a manual regeneration immediately, simultaneously press ▲ and ▼ for three seconds. The system will begin to regenerate immediately. The request cannot be cancelled.

Note: For softeners, if brine tank does not contain salt, fill with salt and wait at least two hours before regenerating

B. Power Loss

Only the current time of day will need to be reset if power is lost for greater than 8 hours. If power is lost while the system is regenerating, the control will complete regeneration at the point of interruption once power is restored. Reset the clock (refer to section 9-C.

C. Error Message

If “E1,” “E2”, “E3” or “E4” appears on the display contact the OEM for help or refer to section 12 of this manual. This indicates that the valve did not function properly.

7. Replacement Parts

DCS6 Drive Cap Assembly, Downflow Piston, Upflow Piston, Regenerant Piston and Spacer Stack Assembly

Drawing No.	Order No.	Description	Quantity
1	110-0006-XX	DCS6 Spacer Stack Assembly	1
2	31-0070-XX	Drive Cap ASY	1
3	Back Plate	Refer to Programming and Cover Drawing Manual	1
4a	56-0027-XX	DCS6 Piston DownflowASY	1
4b	DW-3011-SO	DCS6 Piston UpflowASY	
5	56-0032-XX	DCS6 Regenerant Piston	1
6	35-0104-RB	O-ring 228	1
7	35-0107-RB	O-ring 337	1
8	35-0108-RB	O-ring 215 (Distributor Tube)	1
Not Shown	DW-3001-SO	DCS6 Body ASY Downflow	1
	DW-3001-02	DCS6 Mixing Valve Body ASY	
	DW-3001-UP	DCS6 Body ASY Upflow	
	DW-3001-02UP	DCS6 Mixing Valve Body UpflowASY	

Note: The regenerant piston is not used in backwash only applications.

1" Valve Breakdown

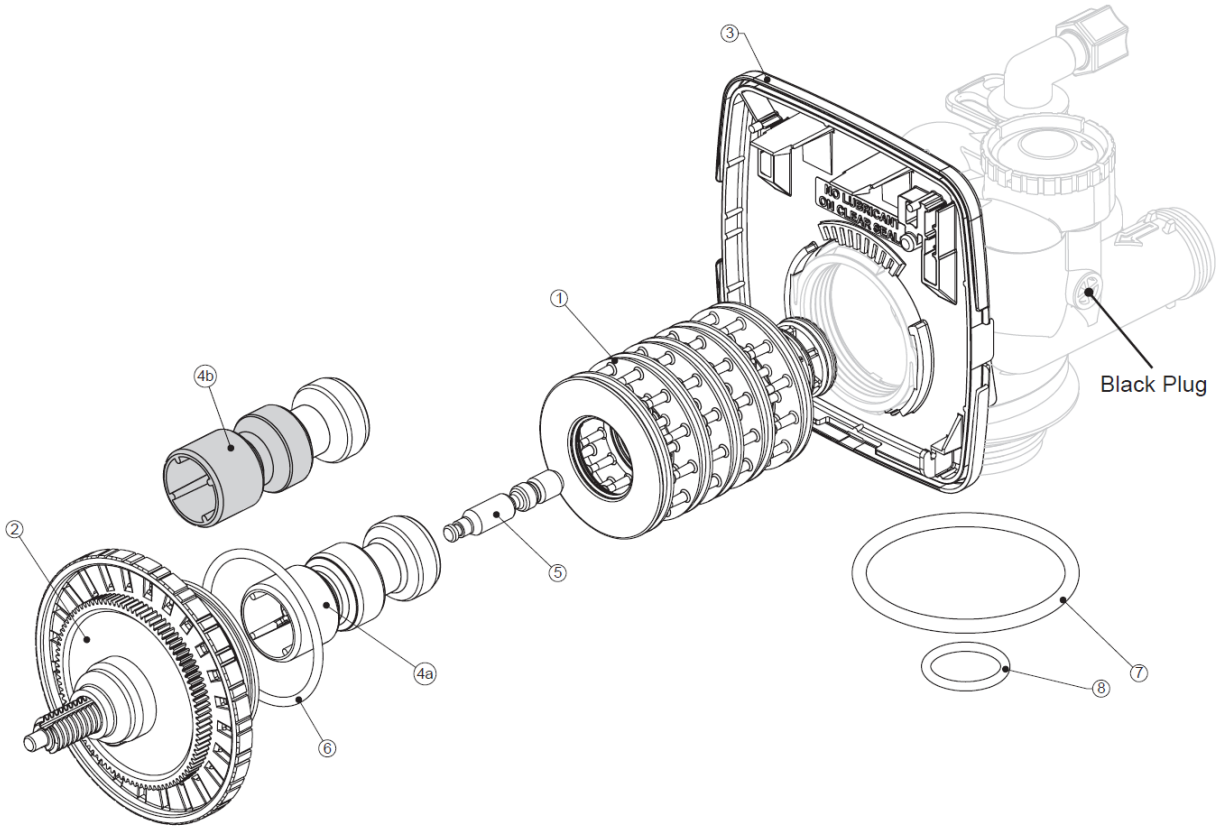

DCS6 Drive Cap Assembly, Downflow Piston, Regenerant Piston and Spacer Stack Assembly

Drawing No.	Order No.	Description	Quantity
1	110-0007-XX	DCS6 Spacer Stack Assembly	1
2	31-0070-XX	Drive Cap ASY	1
3	Back Plate	Refer to Programming and Cover Drawing Manual	1
4	56-0031-XX	DCS6 Piston DownflowASY	1
5	56-0032-XX	DCS6 Regenerant Piston	1
6	35-0104-RB	O-ring 228	1
7	35-0107-RB	O-ring 337	1
8	DW-3358-SO	O-ring 219 (Distributor Tube Opening 1.32")	1
	N.A.	O-ring 218 (Distributor Tube Opening 32mm)	
Not Shown	DW-3020-SO	DCS6 Body ASY Downflow (Distributor Tube Opening 1.32")	1
	DW-3020-01-SO	DCS6 Mixing Valve Body DownflowASY (Distributor Tube Opening 1.32")	
	DW-3020-02-SO	DCS6 Body ASY Downflow (Distributor Tube Opening 32mm)	
	DW-3020-03-SO	DCS6 Mixing Valve Body DownflowASY (Distributor Tube Opening 32mm)	

Note: The regenerant piston is not used in backwash only applications.

1-1/4" Valve Breakdown

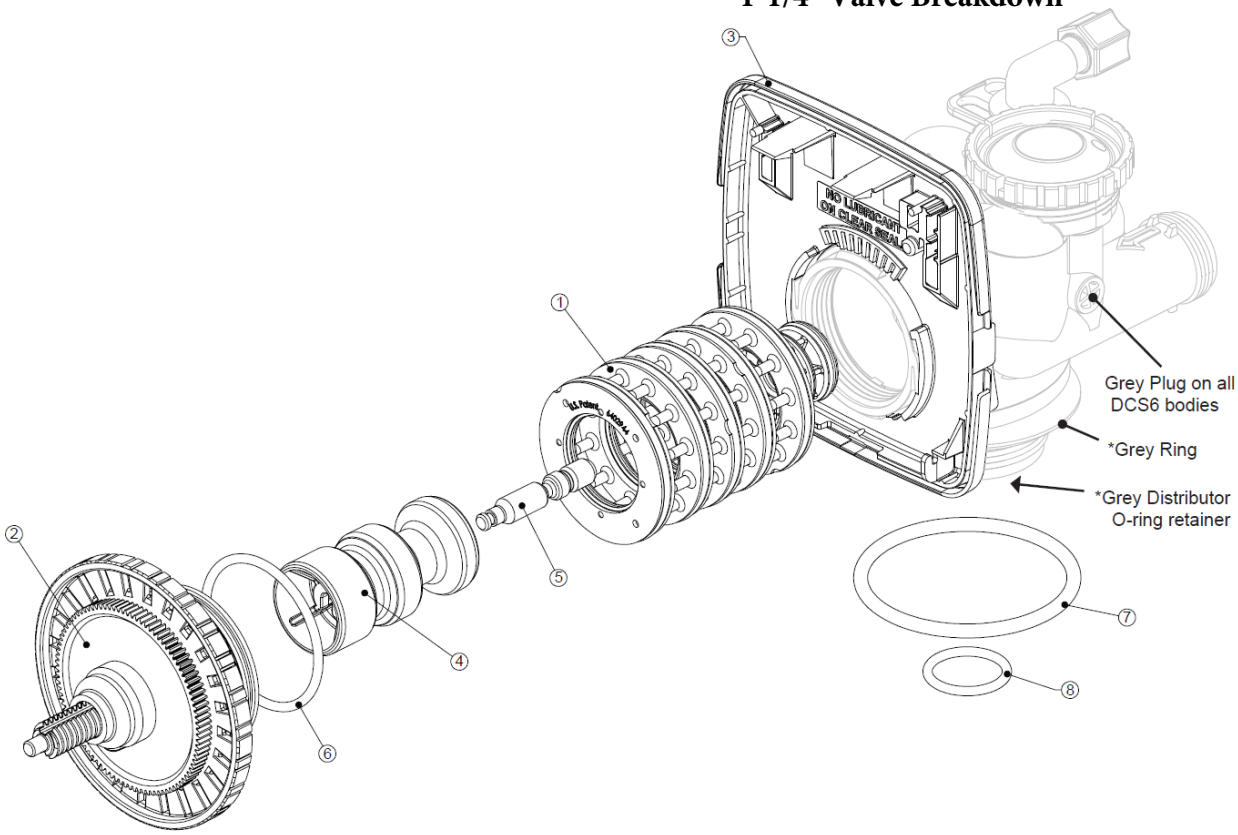

*Only for valves that have a 32mm Distributor Tube Opening

Drain Line - 1"

Drawing No.	Order No.	Description	Quantity
1	DW-4615-SO	Elbow Locking Clip	1
2	DW-3008-SO	DCS6 Drain FTG 1 Straight	1
3*	DW-3166-SO	DCS6 Drain FTG Body 1	1
4*	DW-3167-SO	DCS6 Drain FTG Adapter 1	1
5*	DW-3163-SO	0-ring 019	1
6*	DW-3150-SO	DCS6 Split Ring	1
7*	DW-3151-SO	DCS6 Nut 1" QC	1
8*	DW-3105-SO	O-ring 215	1
9	16-0157-XX	DCS6 DLFC 9.0 gpm for 1	One DLFC must be used if 1" fitting is used
	16-0158-XX	DCS6 DLFC 10.0 gpm for 1	
	16-0151-XX	DCS6 DLFC 11.0 gpm for 1	
	16-0159-XX	DCS6 DLFC 13.0 gpm for 1	
	16-0154-XX	DCS6 DLFC 15.0 gpm for 1	
	16-0155-XX	DCS6 DLFC 17.0 gpm for 1	
	16-0160-XX	DCS6 DLFC 20.0 gpm for 1	
	16-0161-XX	DCS6 DLFC 25.0 gpm for 1	

* Can be ordered as a set. Order number 14-0070-XX, description: DCS6 Drain FTG 1 Straight.

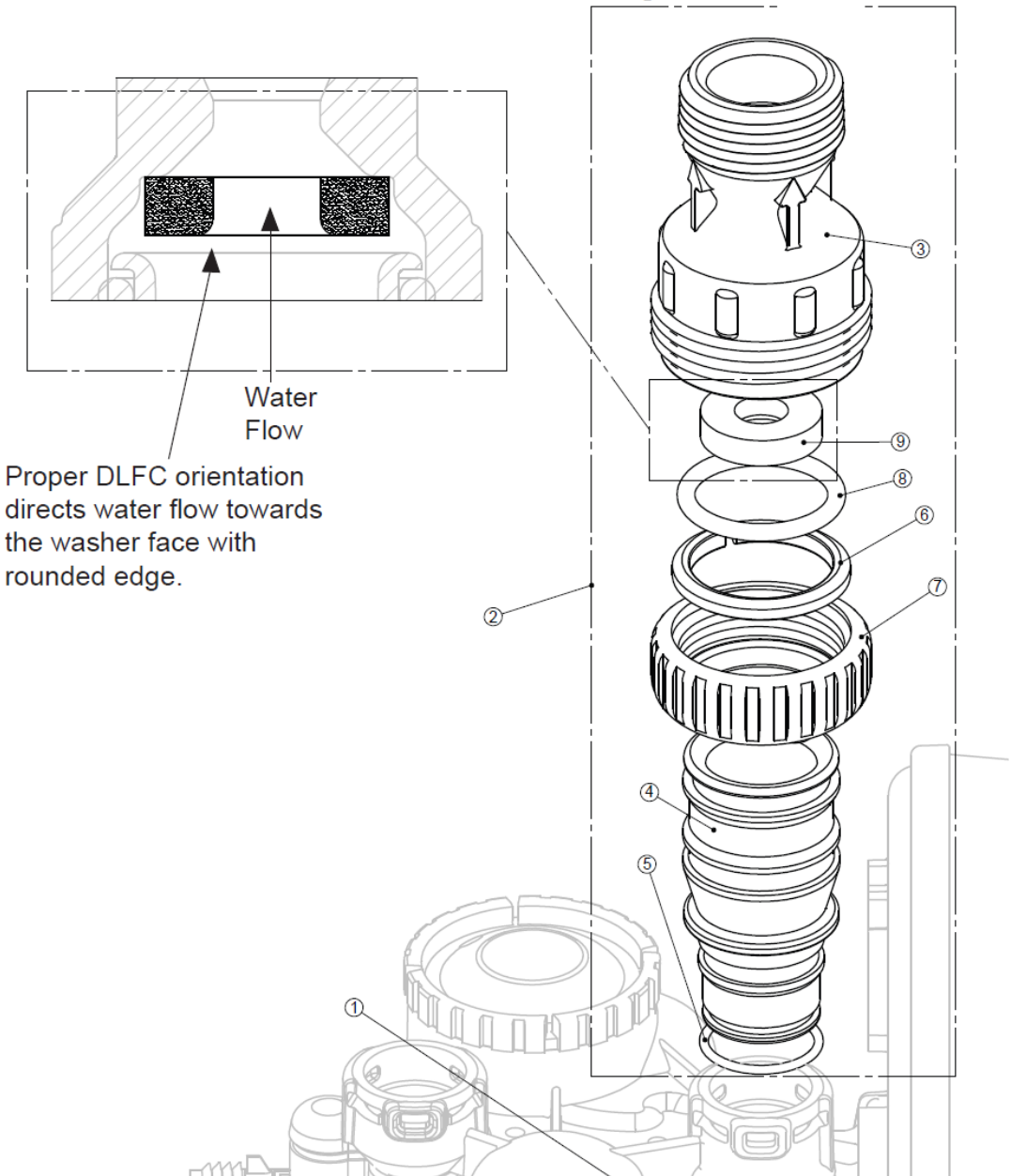

Bypass Valve

Drawing No.	Order No.	Description	Quantity
1	DW-3151-SO	DCS6 Nut 1" Quick Connect	2
2	DW-3150-SO	DCS6 Split Ring	2
3	DW-3105-SO	O-Ring 215	2
4	N.A.	DCS6 Bypass 1" Rotor	2
5	N.A.	DCS6 Bypass Cap	2
6	N.A.	DCS6 Bypass Handle	2
7	N.A.	DCS6 Bypass Rotor Seal Retainer	2
8	N.A.	O-ring 135	2
9	N.A.	O-ring 112	2
10	N.A.	O-ring 214	2

(Not Shown) Order No. 12-0104-XX, Description: WS1 Bypass Vertical Adapter Assembly

Order No.	Description	Quantity
DW-3151-SO	DCS6 Nut 1" Quick Connect	2
DW-3150-SO	DCS6 Split Ring	2
DW-3105-SO	O-Ring 215	2
12-0104-XX	DCS6 Bypass Vertical Adapter	2

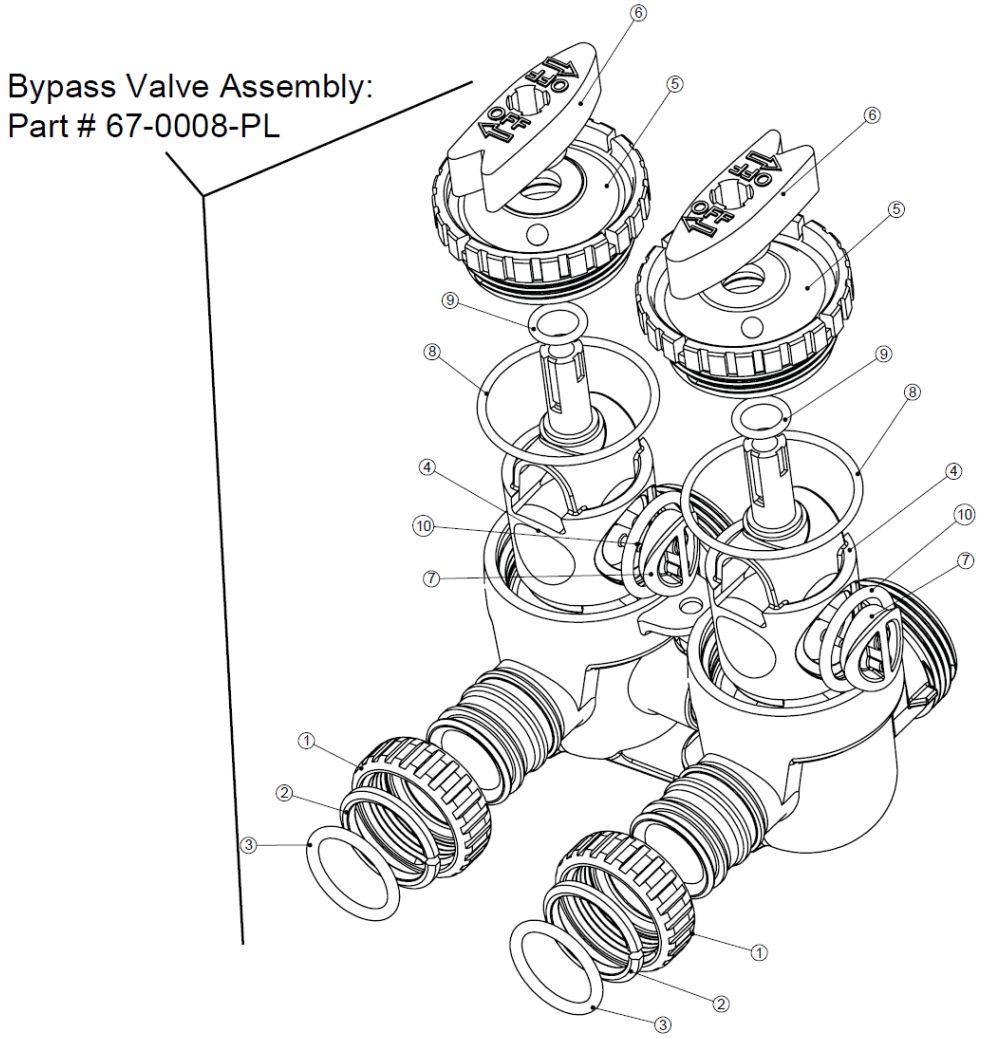

12. Control Error Codes

Problem	Possible Cause	Solution
E1, Err-1001, Err-101 = **Control unable to sense motor movement**	Motor not inserted full to engage pinion, motor wires broken or disconnected	Disconnect power, make sure motor is fully engaged, check for broken wires, and make sure two-pin connector on motor is connected to the two pin connection on the PC board labeled MOTOR. Press NEXT and REGEN buttons for 3 seconds to resynchronize software with piston position or disconnect power supply from PC board for 5 seconds and then reconnect.
	PC board not properly snapped into drive bracket	Properly snap PC board into drive bracket and then press NEXT and REGEN buttons for 3 seconds to resynchronize software with piston position or disconnect power supply from PC board for 5 seconds and then reconnect.
	Missing reduction gears	Replace missing gears
E2, Err-1002, Err-102 = **Control valve motor ran too short and was unable to find the next cycle position and stalled**	Foreign material is lodged in control valve	Open up control valve and pull out piston assembly and seal/stack assembly for inspection. Press NEXT and REGEN buttons for 3 seconds to resynchronize software with piston position or disconnect power supply from PC board for 5 seconds and then reconnect.
	Mechanical binding	Check piston assembly and seal/stack assembly, check reduction gears, check drive bracket and main drive gear interface. Press NEXT and REGEN buttons for 3 seconds to resynchronize software with piston position or disconnect power supply from PC board for 5 seconds and then reconnect.
	Main drive gear too tight	Loosen main drive gear. Press NEXT and REGEN buttons for 3 seconds to resynchronize software with piston position or disconnect power supply from PC board for 5 seconds and then reconnect.
	Improper voltage being delivered to PC board	Verify that proper voltage is being supplied. Press NEXT and REGEN buttons for 3 seconds to resynchronize software with piston position or disconnect power supply from PC board for 5 seconds and then reconnect.

12. Control Error Codes (2)

Problem	Possible Cause	Solution
E3, Err-1003, Err-103 = **Control valve motor ran too long and was unable to find the next cycle position and stalled**	Motor failure during a regeneration	Check motor connections. Press NEXT and REGEN buttons for 3 seconds to resynchronize software with piston position or disconnect power supply from PC board for 5 seconds and then reconnect.
	Foreign material built up on piston and stack assemblies creating friction and drag enough to time out motor	Replace piston and seal/stack assemblies. Press NEXT and REGEN buttons for 3 seconds to resynchronize software with piston position or disconnect power supply from PC board for 5 seconds and then reconnect.
	Drive bracket not snapped in properly that reduction gears and drive gear do not interface	Snap drive bracket in properly. Press NEXT and REGEN buttons for 3 seconds to resynchronize software with piston position or disconnect power supply from PC board for 5 seconds and then reconnect.
E4, Err-1004, Err-104 = **Control valve motor ran too long and timed out trying to reach home position**	Drive bracket not snapped in properly that reduction gears and drive gear do not interface	Snap drive bracket in properly. Press NEXT and REGEN buttons for 3 seconds to resynchronize software with piston position or disconnect power supply from PC board for 5 seconds and then reconnect.