www.diamondh2o.com

Freedom™ TR

Tannin Removal Water Softener Systems

DTRS-100, DTRS-150, DTRS-200, DTRS-250, DTRS-300

MANUAL

DIAMOND H2O
A Grieshaber Company

008FTR-14-1M

Set Up Instructions for DTRS Tannin Removal System

Inspect the packaging of the equipment to confirm that nothing was damaged during shipping. (Figure 1)

Figure 1: Original Packaging of DCS7 Twin Tank System
This is how the packages will generally arrive

Remove the resin tank(s) and valve(s) from the packaging. Make sure everything is included and without damage. Notice that the valve and brine line hose will be found in the brine tank. Below is a checklist with everything you should have received.

_____ 1) Control Valve
(Figure 2)

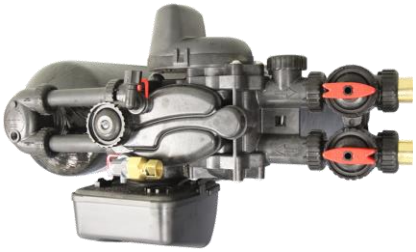

Figure 2: Control Valve

_____ 2) Brine Tank (Figure 4)
_____ 3) Brine Line Hose (Figure 6)
_____ 4) Softener Tank (Figure 5)

Figure 4: Brine Tank

Figure 5: Softener Tank

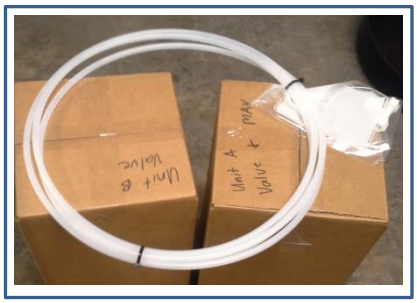

Figure 6: Brine Line Hose

_____ 5) Correct Amount of Gravel (from Model and Media Requirements Table on page 2)
_____ 6) Correct Amount of Resin (from Model and Media Requirements Table on page 2)

Call Diamond H2O right away if anything is missing. Contact the freight company **immediately** if anything is damaged. Diamond H2O will not be liable for any damage received after shipping.

Packaged By: _____ Date: _____

Received By: _____ Date: _____

Table 1: Media Requirements.

Example: A DCS7-210-100 would require 7 cubic feet of resin and 100 pounds of gravel per tank.

Model Number	Cation Resin per Tank (cu. ft.)	Anion Resin per Tank (cu. ft.)	Amount of Gravel per Tank (pounds)
DTRS-100	0.75	0.25	10
DTRS-150	1	0.25	10
DTRS-200	1.5	0.5	20
DTRS-250	2	0.5	25
DTRS-300	2	1	40

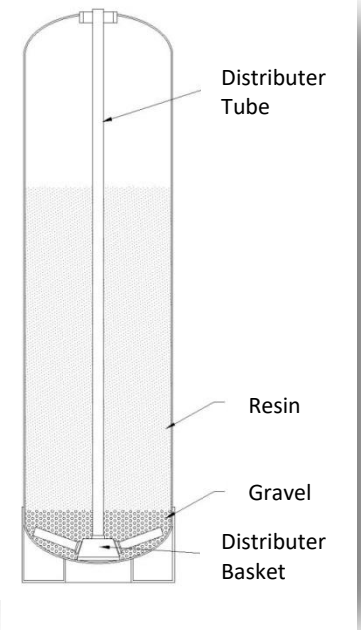

NOTE:

Bags of gravel should already be marked with a tag showing whether they belong to the brine tank or the softener tank.

Table 2: System Specifications

Table 9: DTRS System Specifications																	
MODEL	IRON CAPACITY @10lbs/ft^3 Salt	TANNIN CAPACITY @10lbs/ft^3 Salt	NITRATE CAPACITY @20+lbs/ft^3 Salt	NITRITE CAPACITY @20+lbs/ft^3 Regen	SOFTNER CAPACITY & SALT				FLOW RATE			SOFTENER TANK(S)			#20 Gravel	BRINE TANK	
					MAXIMUM		MINIMUM		SERVICE	PRESSURE DROP	BACK-WASH	DIMEN's	CAT. RESIN	AN. RESIN		DIMEN's	CAPACITY
	(ppm gal)	(ppm gal)	(ppm gal)	(ppm gal)	Capacity (gpg gal)	Salt/ Regen	Capacity (gpg gal)	Salt/ Regen	(gpm)	(psi)	(gpm)	Dia x Ht (in)	Cu Ft	Cu Ft	(lbs.)	Dia x Ht (in)	(Lbs.)
DTRS-100	4,125	1,250	8,300	650	22,500	15 lb	18,750	10 lb	3	5.6	2.2	9 x 48	0.75	0.25	10	18 x 33	300
DTRS-150	5,500	1,250	8,300	650	30,000	19 lb	25,000	15 lb	3	2.7	2.7	10 x 54	1.25	0.25	10	18 x 40	400
DTRS-200	8,250	2,500	16,600	1,300	45,000	30 lb	37,500	20 lb	5	3.9	3.2	12 x 52	1.5	0.5	20	18 x 40	400
DTRS-250	11,000	2,500	16,600	1,300	60,000	38 lb	50,000	25 lb	5	3.2	4.2	13 x 54	2	0.5	25	18 x 40	400
DTRS-300	11,000	5,000	33,200	2,600	60,000	45 lb	50,000	30 lb	10	6.9	5.3	14 x 65	2	1	40	24 x 50	900

Table 3: Spare Parts List

Item	Part Number
Battery, 3 volt lithium coin cell	Type 2032
Motor Assembly	82-0022-XX
PC Board 4-Digit	V3818TC
AC Adaptor 110V-12V	66-0005-XX
O-ring 228	V3135
O-ring 337	V3180
O-ring 215 (for 1" distributor tube)	V3105
O-ring 219 (for 1.32" distributor tube)	V3358
Blue Funnel (For 2.5" diameter tanks)	97-0014-PL
Black Funnel (For 4.0" diameter tanks)	97-0015-PL

1. Nitrate Removal Considerations

Sizing a DTRS for Nitrate removal requires special attention to make sure that the system does not allow a nitrate residual. Water being treated should be tested before and periodically after the system is installed to confirm that the system is reducing the concentration of nitrate/nitrite to a safe level. When installing, keep in mind that incoming nitrate levels can change over time.

To ensure these systems have no nitrate or nitrite leakage:

a. The capacities for nitrate and nitrite removal in Table 2 have been reduced by 20% of the experimental values. This helps to ensure that these systems are programmed to regenerate before the system reaches the breaking point.

b. Each system should be programmed to regenerate with at least 10lbs of salt per cubic foot of cation resin. Each DTRS system is also manufactured so that the ratio of cation resin to anion resin is at least 2:1. This helps ensure that the anion media is regenerated with at least twice the amount of salt used to regenerate the cation media. With this design, at least 20lbs of salt per cubic foot of anion resin will be used to regenerate the anion media.

c. DTRS systems should not be installed to remove nitrate/nitrite on sites with tannins.

d. Studies have been done to determine the effect of sulfate on the capacity of the anion resin for the exchange of nitrate and nitrite. Sulfate has a higher affinity than nitrate and nitrite on this resin and will reduce the capacity of the anion resin. The chart below can be used to estimate the capacity based on the sulfate concentration. These capacities have been reduced by 20% of the experimental values.

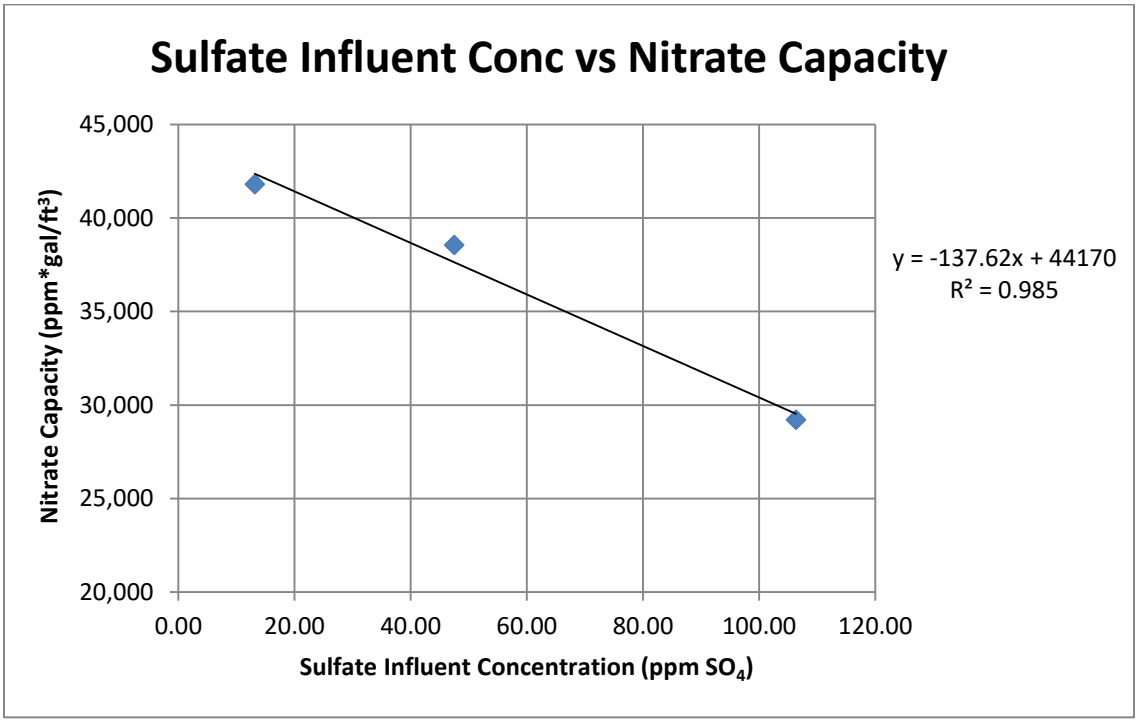

2. Obtain the required tools listed below:

A. Utility Knife
B. Pliers
C. Phillips Screwdriver
D. Hammer

3. Place the tanks near a water source.

A. Select a position near a floor drain that has adequate carrying capacity to handle the backwash flow rate. Refer to the specification Table in Section 8 for the appropriate flow rate.
B. Place the softener(s) and brine tank on a level, firm foundation, like concrete.
C. **Determine the "front" of each tank** received. For each tank:
   a. Make sure that the distributer riser is flush with the top of the resin tank.
   b. Before placing any water, gravel, or resin in the resin tank, screw in a control valve to the point where it is secure. The valve does not need to be forced on, but should be snug.
   c. The two tanks should be placed next to each other, with the brine tank off to the side. The correct distance between the two tanks can be determined by connecting the control valve to both tanks.
   d. Mark the "front" of each resin tank (shown in Figure 7) with either a marker or tape. The front of the resin tank is determined by the location of the face of the control valve once it has been secured to the face of the control valve. Make sure that the system is positioned in a way that the plumbing can be installed correctly.

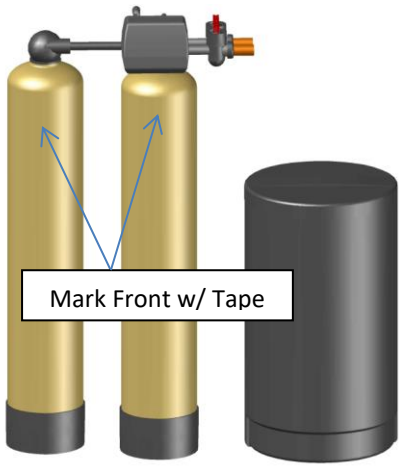

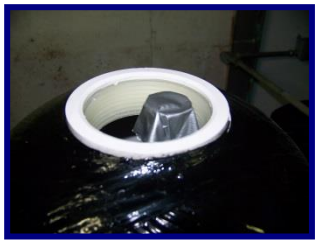

Figure 8: How to Block Distributer Tube

D. ***Before Filling the Tanks***:
   a. Remove the valve from both tanks
   b. Ensure that the fronts of the tanks are positioned correctly. Once filled, the resin tanks will be very difficult to move.
   c. Cover the exposed end of the distributor risers to make sure no resin gets inside the tube. Covering up the risers with duct tape is one option, shown in Figure 8.
   d. Obtain a funnel to assist placing the resin in the resin tanks. (A funnel designed specifically for our resin tanks can be ordered from Diamond H2O Conditioning. The part numbers for the two types of funnels are table 3.)

4. Setting up the tank:

A. Fill the tank up to 30% full of water.

B. Check the system specifications on page 2 to determine the correct amount of gravel and resin needed for your system.

C. Position the distributor tube so it is in the center of the tank, shown in Figure 9.

Figure 9: Centered Distributer Tube

D. (For systems with support gravel)
SLOWLY, pour the correct amount of support gravel into the tank without getting any gravel into the distributer tube.

a. CAUTION: The distributor system is made of PVC and will break if the gravel is poured in too quickly.

Visually confirm that the gravel is level and covering the distributor basket and radials, if it is not, contact Diamond H2O Conditioning.

E. **SLOWLY**, pour the correct amount of resin into the tank. Try to keep the media level by carefully rocking the tank back and forth.

F. Fill the rest of the tank with water to prevent air from getting in the tanks and potentially losing media.

G. Verify that there is a large O-ring on the control valve(s) adapter base.

H. Place the control valve on the tank, making sure that the distributor tube fits into the bottom of the control valve.

I. Tighten the control valve onto the tank to the point that it is snug. Double check that the valve is in a correct position to be able to install the plumbing.

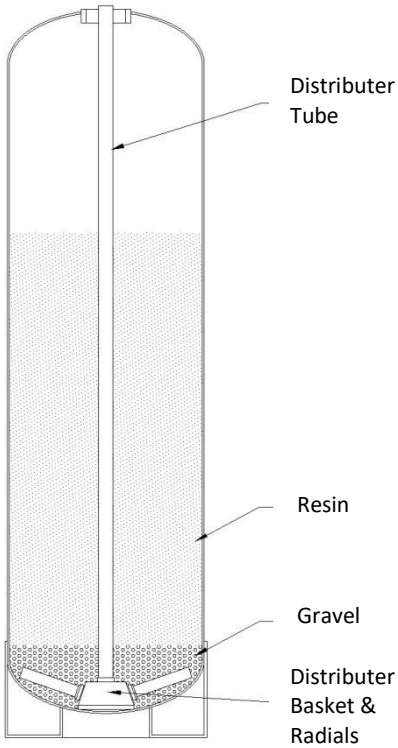

Figure 10: Resin Tank Diagram

5. Connect the brine tank.

A. Remove the ties on the brine line hose (included in the brine tank).

B. Remove the well cap and connect one end of the brine line hose to the brine line connection (Shown in Figure 12) of the brine tank. Tighten the brine line hose to the brine line connection by turning the cap of the brine line connection clockwise by hand. Make sure that no air can get into the line, or the softener will not regenerate properly.

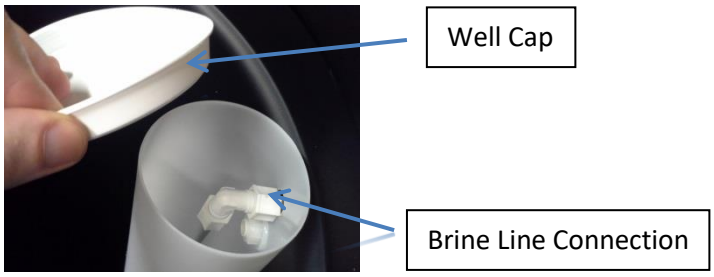

Figure 11: Brine Well Picture

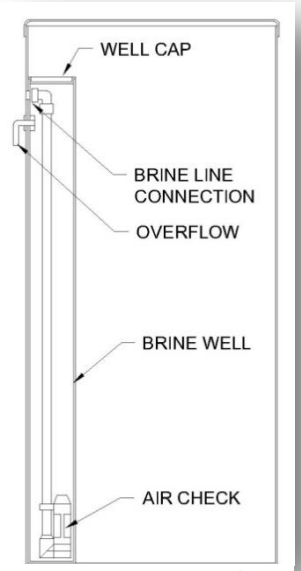

Figure 12: Brine Tank

C. A red latch with a Polytube insert attached is placed under the brine inlet of each valve. Place this insert in the brine line before connecting it to the brine inlet. (Figure 14)

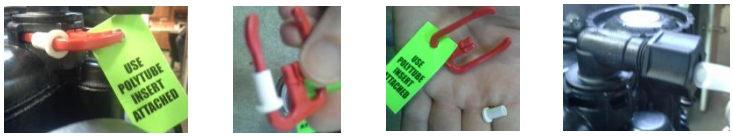

Figure 13: Installing Brine Line Polytube

Tighten all connections using a wrench and tightening the caps clockwise.

D. Safely dispose of any leftover tubing.

E. Fill the brine tank with salt.

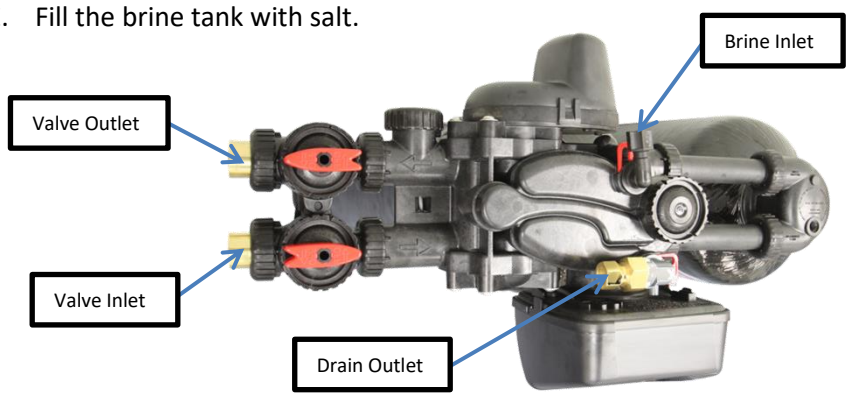

Figure 14: Control Valve Diagram

6. Connect the Valves to the Water Source

A. Pipe or tube a line from the Control Valve Drain (Figure 14) to the drain.

B. For systems on Metallic Piping

a. The anion exchange of the tannin removal media may result in lower alkalinity. The decreased alkalinity reduces the water's ability to neutralize acids and may cause the water to become more corrosive.

b. If this valve is being installed on metallic water supply systems being used as an electrical ground, install a properly sized electrical bonding jumper across the inlet/outlet pipes serving these devices to ensure the valve does not interrupt the electrical continuity of the path to ground.

DO NOT

- install a valve in this line
- use a pipe smaller than the valve size
- make a direct connection to the drain
  - Provide an air gap at least four times the diameter of the drain pipe to conform to sanitation codes and be able to observe the drain flow.
- use an excessive amount of elbows in the plumbing

C. Connect the facility plumbing to the control valve inlet following all local codes.

D. Temporarily run the control valve outlet to the drain.

Note: Make sure all piping is free of thread chips and other foreign matter.

7. Start up the system for the first time.

A. Add about ten gallons of water to the brine tank.

B. Make sure the tanks are filled with water.

a. Manually put the control valve into regeneration (Hold the regen button)

b. A mixture of air and water will flow from the drain line.

c. Slowly open the bypass valve's inlet to allow water to slowly enter the tank. (shown in figure 15).

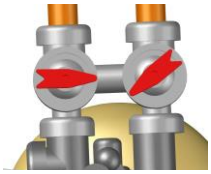

Figure 15: Opening bypass valve's inlet

d. Once the tank is filled, only water will be coming out of the drain line. Put the system back into bypass operation. Run each step of the regen cycle (Figure 21) for a few minutes.

C. Program the Valve. Most of the settings were pre-programed by Diamond H2O. The installer must enter the installer settings shown in part 8 section C of this manual.

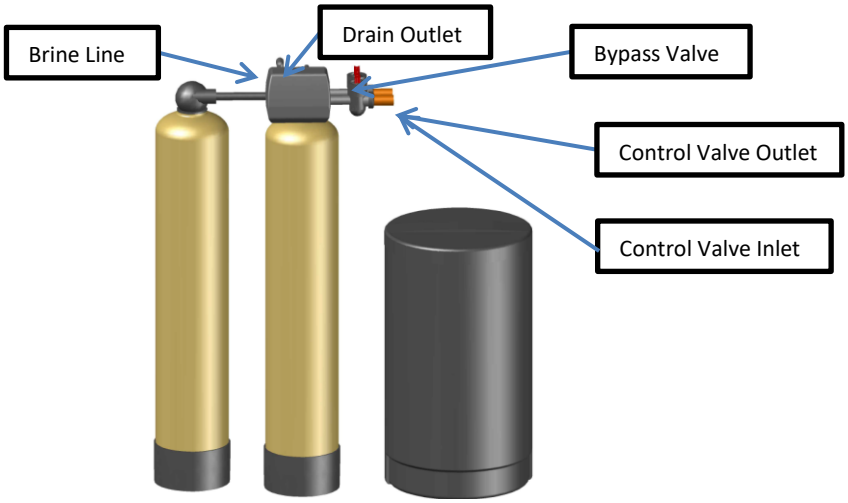

Figure 16: Finished System

8. Bypass Valve Operations

A. The red controls of the bypass valve can be turned 90° resulting in four modes of operation.

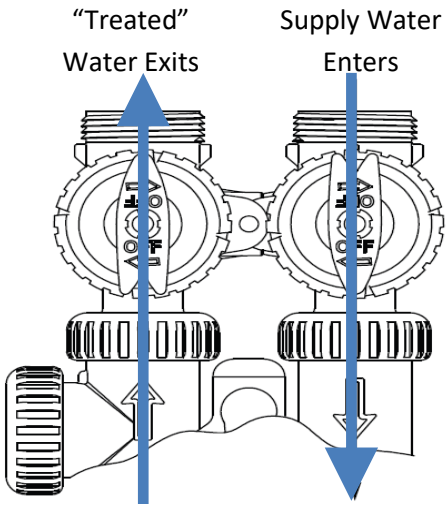

Figure 17: Normal Operation

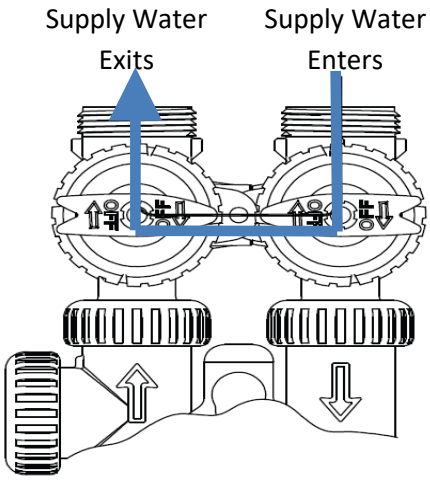

Figure 18: Bypass Operation

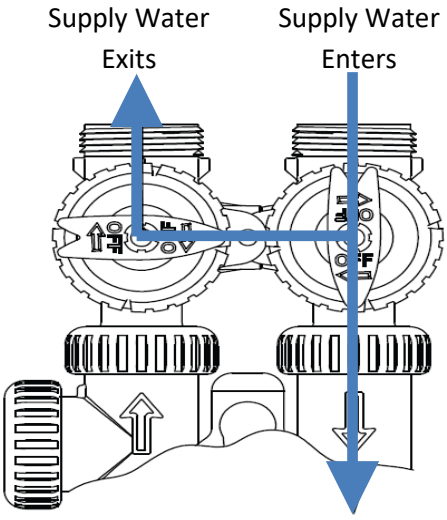

Figure 19: Diagnostic Mode

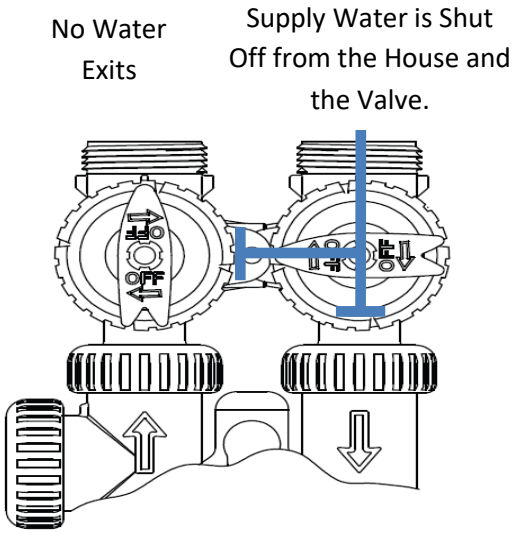

Figure 20: Shut Off Mode

Figure 21: General Softener Operations

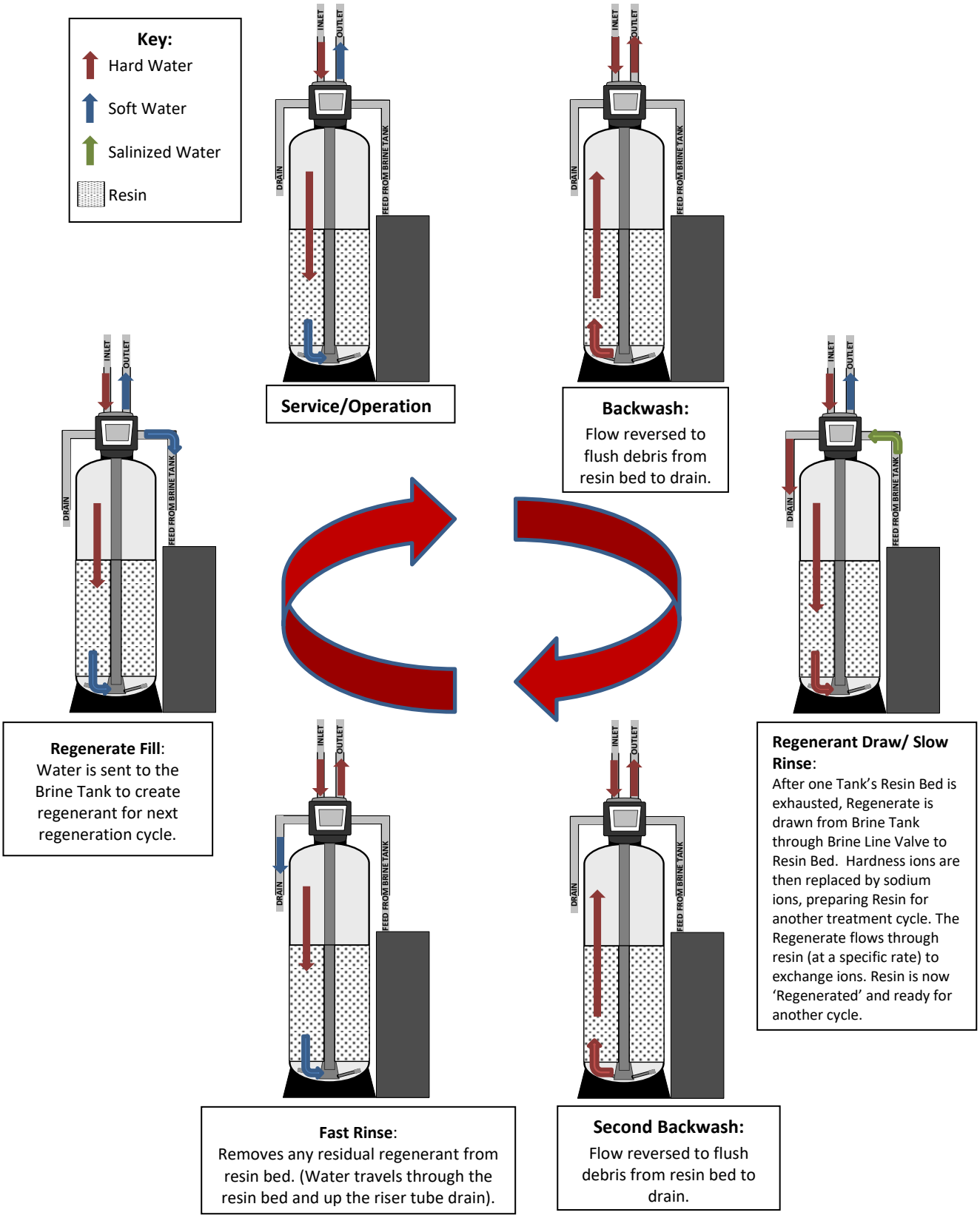

9. Program the Valve

To enter into the programming mode, press and hold the indicated buttons on the control valve for 5 seconds. For each set of settings (A-H), the display will start by showing the parameter listed as a. To go to the next parameter, press the next button on the control valve. To go back to the last parameter, press the regen button on the control valve. After you hit next on the last parameter, you will be returned to the home screen, where the clock should be displayed.

Note: Please defer to the programming guide included in the packaging for the correct settings for your system.

Important: All configuration settings and Regen cycle time settings will be entered by Diamond H2O prior to shipping. No value in these settings needs to be changed in the field. If you can't get into a certain setting, make sure the display is unlocked (Part H).

A. Installer Display Settings ***Entered on Site By Customer***

Press and Hold: **NEXT** & ▲

a. Set Hardness (grains per gallon) **(Default 20)**

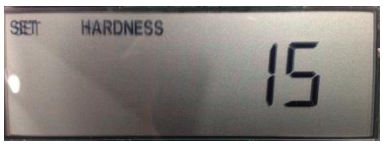

b. Set Day Override (1-28, off) **(Default 14)**

c. Set Regen Time (On 0)

B. Configuration Settings (Entered by Diamond H2O)

Press and Hold (5seconds): **NEXT &** ▼ Release.

Press and Hold (5 seconds): **NEXT &** ▼

a. Set Valve Type: **1.0"t**, 1.0", 1.25", 1.5" or 2.0".

If 1.0, 1.25 or 1.0t are selected press NEXT to go to step B3.

If 1.5 or 2.0 are selected, press NEXT to go to Step B2. Press REGEN to exit Configuration Settings

b. Flow Meter Size: 1.5, 2.0,3.0, 1.0r (1.0 Remote Meter) or PUL (Variable Meter Calibration.)

Variable meter pulses of 0.1-150.0 PPG (Pulse Per Gallon) can be selected.

Press NEXT to go to Step 3.

c. Set DP: OFF, on0, dEL, HoLd)

Selecting the use of an outside signal to initiate a regeneration: Selection only matters if a connection is made to the two pin connector labeled DP SWITCH located on the printed circuit board. The following is an explanation of the options:

NOTE: In a twin alternating system each control must have a separate dP signal or dP switch. One dP signal or on dP switch cannot be used for both controls.

On0- If the dP switch is closed for an accumulative time of 2 minutes a regeneration will be signaled to the unit. In a twin alternating system the MAV will transition first to switch units so that the signaled unit can start regeneration. After the MAV has fully transitioned, the regeneration begins immediately. Note: for 1”-1.5” control valves programmed for twin alternating: if the dP function “on 0 is set, the Delayed rinse and fill feature is not available.

DEL- If the dP switch is closed for an accumulative time of 2 minutes a regeneration will occur at the scheduled delayed regeneration time. In a twin alternating system once the dP switch is triggered the PC Board will display “REGEN TODAY” and when the delayed regen time comes the control will switch tanks and the triggered unit will then go into regeneration. Note: for 1” -1.5” control valves programmed for twin alternating: if the dP function “dEL” is set, the Delayed Rinse and Fill feature is not available.

HoLd- If the dP switch is closed a regeneration will be prevented from occurring while there is switch closure. In a twin alternating system a regeneration of a unit can be prevented upon switch closure. If the unit depletes the capacity down to zero, it will not be allowed to switch tanks to regenerate until the switch is open. Note: for 1”-1.5” control valves programmed for a twin alternating the delayed Rinse and Fill feature can be set.

Press NEXT to go to Step 4

d. **DISPLAY WILL NOT APPEAR WITH 1.0T SELECTED**. Go to step 5.

Set : NHWBP, ALT A, ALT B, SEPS, SYS or OFF

nHBP: Select nHbP for control operation. For not hard water bypass operation the three wire communication cable is not used.

Selection requires that a connection to MAV or No Hard Water Bypass Valve is made to the two pin connector labeled MAV located on the printed circuit board. If using a MAV, the A port of the MAV must be plugged and the valve outlet connected to the B port. When set nHbP the MAV will be driven closed before the first regeneration cycle that is not FILL or SOFTENING or FILTERING, and be driven open after the last regeneration cycle that is not Fill. Note: if the control valve enters into an error state during regeneration mode, the no hard water bypass valve will return to the open Position, if not already there.

Alt (1.0,1.25,1.5): For alternator system using 1.0", 1.25" and 1.5" valves there will be an option to delay the last two cycles for regeneration (only "Rinse" and "Fill"). This feature splits the regeneration into two portions. The first portion of the regeneration will start immediately and all programmed cycles before the "Rinse" and "Fill" cycles will be performed. After all programmed cycles before "Rinse" and "Fill" are completed the control valvewill drive to the service position (displaying "Delayed Rinse = Fill Pending"). When the volume of the on-line unit is depleted to 10% of its programmed capacity, the control valve will be triggered to finish the second porton of the regeneration and complete the "Rinse" and "Fill" cycles and return to Service and be place into Standby mode, and wait to come on-line for service. Set to oFF to deactivate the feature.

Alt (2.0): For alternator systems using the 2" valve, when NEXT is pressed after selecting ALT A or ALT B, a display will allow the user to set the amount of pre-service rinse time for the stand by tank just prior to returning to service. Set to oFF to deactivate this feature. With 1.0t set, the same display appears and is set in a similar manner.

Alt A: For control valve with MAV drive cord (2-pin) attached (Control Valve A)

Alt B: For control valve without MAV drive cord attached (Control Valve B)

SEPS: Separate source operation.

SYS: For use with System Controler

OFF: Use of MAV or nHbP not used

e. Set Fill Units: Min or LBS (FOR 1.5" VALVES ONLY)

If set as a softener, if Step B1 is set to 1.5 and FILL is part of the Regeneration Cycle Sequence, Fill Units or MIN or LBS can be selected. Press NEXT to Exit

Important: All configuration settings and Regen cycle time settings will be entered by Diamond H2O prior to shipping. No value in these settings needs to be changed in the field. If you can't get into a certain setting, make sure the display is unlocked (Part H).

C. Diamond H2O Softener System Setup

Press and Hold(5 seconds): **NEXT** & ▼

a. Set : **Softening**, Filtering

Sets whether the valve is softening or filtering

b. Set Brine Direction: uP or **dn**

Tells control flow of the brine through resin. **(Default dn)**

c. Set Refill Location: PoST or PrE

PoST: to refill the brine tank after the final rinse **(Default)**

PrE: to refill the brine tank four hours before the regeneration time set.

d. Set Backwash (First Cycle)

Sets the amount of time the system will backwash **(Default 10)**

e. Set Brine Draw / Slow Rinse (Second Cycle)

Sets the amount of time the valve will draw from the brine tank. **(Default 60)**

f. Set Second Backwash (Third Cycle)

Sets the amount of time the valve will backwash for a second time. **(Default 10)**

(Diamond H2O standard is 2)

g. Set Rinse (Fourth Cycle)

Sets the amount of time the valve will Fast Rinse. **(Default 10)**

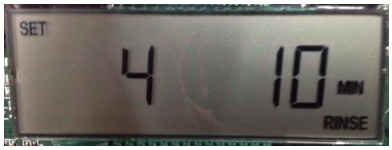

h. Set Fill (Fifth Cycle)

Sets the amount Salt in LBS for 1.0”-1.5” valves and refill time in minutes for 1.5”-2.0”.

1.5” = 0.5 gpm BLFC (Brine Line Flow Control)

2.0” = 2.2 gpm BLFC

i. Set System Capacity

The system capacity should be based on the volume of resin and the LBS of salt used during regeneration. **(Default 24)**

j. Set Volume Capacity: AUTO,oFF or a number.

Auto: capacity will be automatically calculate and reserve capacity will be automatically estimated.

oFF: regeneration will be triggered solely by the day override setting.

A Number: regeneration will be triggered by the value specified in gallons.

k. Set Regeneration Time Options: NORMAL, on0, NORMAL+on0.

NORMAL: means regeneration will occur at the pre-set time

On 0: means regeneration will occur immediately when the volume capacity reaches 0

NORMAL + on 0: means regeneration will occur at one of the following:

-the preset time when the volume capacity falls below the reserve or the specified number of days between regenerations is reached whichever comes first.

-immediately after 10 minutes of no water usage when the volume capacity reaches 0.

l. Set Relay Operation:Time on , Gallons Softening On, Gallons Softening Regen, Error or oFF

Set Time On: Relay activates after a set time at the beginning of a regeneration and then deactivates after a set period of time. The start of regenerations defined as a first backwash cycle or Dn brine cycle, whichever comes first.

Set Gallons Softening On: Relay activates after a set number of gallons have been used while in service and then deactivates after a set period of time or after the meter stops registering flow, whichever comes first.

Set Gallons Softening Regen On: Relay activates after a set number of gallons have been used while in service or during regeneration and then deactivates after a set period of time or after the meter stops registering flow, whichever comes first.

ERROR: Relay closes whenever the valve enters error mode, and immediately deactivates when error mode is exited. If set to ERROR, Steps M1 and N1 will not be shown.

Set oFF: If set to oFF, steps M1 and N1 will not be shown. **(Default)**

m. Set Relay Actuation: Time or Gallons

Relay Actuation Time: After the start of a regeneration the amount of time that should pass prior to activating the relay. The start of the regeneration is defined as the first backwash cycle, Dn Brine cycle or Up brine cycle whichever comes first. Ranges from 1 second to 200 minutes.

Relay Actuation Gallons: Relay activates after a set number of gallons has passed through the meter. Ranges from 1 to 200 gallons.

n. Set Relay Deactivate Time

If set time on is selected in step M1 the relay will deactivate after the time set has expired. Ranges from 1 second to 200 minutes.

If Set Gallons Softening On or Set Gallons Softening Regen On is selected in step L1 the relay will deactivate after the time set has expired or after the meter stops registering flow, whichever comes first. Ranges from 1 second to 20 minutes

D. Diagnostics

Press and Hold: ▲ & ▼

a. Software Version
b. Volume, total used since start-up
c. Days, total since start-up.
d. Regenerations, total number since start-up
e. Error Log: this display shows a history of the last 10 errors generated by the control during operation.
f. Days, since last regeneration
g. Volume, since last regeneration.
h. Volume reserve capacity used for last 7 days
i. Volume, 63-day usage history: This display shows day 0 (for today) and flashes the volume of the water treated today. Pressing up arrow will show day 1 (which would be yesterday) and flashes the volume of water treated on that day. Continue to press up arrow to show the maximum volume of water treated for the last 63 days. If the regeneration occurred on the day the word"REGEN" will also be displayed. This display will show dashes if the water meter is not installed.
j. Twin Tank Valve transfer history: only displays when 1.0t was selected for valve type. Use the arrows to scroll through the last ten transfers. The first position in the display ranges form 0-9 with the lowest number being the most recent transfer. The second position in the display will be either "A" or "B. If "a" then the tank with the valve on it was in service, if "b" the tank with the in/out head on it was in service. The next three digits represent the number of hours ago the transfer occurred. The display alternates with the volume that was treated before the tank transferred.
k. MAV Drive History in the direction of retracted piston rod position. Display will only be shown if valve type is 1.0t.or if Alt A/b,nHbP , SEPS was selected. Up to a four digit number will appear after the "L" which stands for latest and "A" which stands for average. Drive time is measured in 1/100 of a second; i.e., a 17.10 second move is displayed as " 1710".
l. MAV Drive History in the direction of extended piston rod position. (Same as K1 only in the extended position.)

E. Set Time of Day

Press and Hold: ▼

a. Hours: use up and down arrow to change and next to advance to minutes
b. Minutes: use up and down arrow to change and next to save

F. **User Displays**

a. User Display One

If volume is selected in the Configuration Settings (default for Diamond H2O), the display shows the volume remaining until the next regeneration. This screen will not be shown if either volume is not selected or a meter is not used.

b. User Display Two

This displays the number of days until regeneration.

c. User Display Three

This displays the flow rate in gallons per minute (gpm). If a meter is not used, this display will be shown and will display 0

d. User Display Four

Displays total volume in gallons since last rest. If a meter is not used, this display will be shown and will display 0.

NOTE: Hold the down arrow for 3 seconds to reset to 0.

e. User Display Five

This displays the current time.

Press and Hold: **NEXT** & **REGEN**

G. Lock/Unlock Settings

The valve has a lock feature which doesn't allow the settings other than time to be changed. The User displays are still visible, however diagnostics will be hidden. Enter the keys in the sequence shown below to lock/unlock the screen.

▼ **-- NEXT --** ▲ **– REGEN**

10. Replacement Parts

Drive Cap Assembly, Downflow Piston, Upflow Piston, Regenerant Piston and Spacer Stack Assembly

Drawing No.	Order No.	Description	Quantity
1	110-0006-XX	DCS7 Spacer Stack Assembly	1
2	31-0070-XX	Drive Cap ASY	1
3a	56-0027-XX	DCS7 Piston DownflowASY	1
3b	DW-3011-SO	DCS7 Piston UpflowASY	
4	56-0032-XX	DCS7 Regenerant Piston	1
5	35-0104-RB	O-ring 228	1

Note: The regenerant piston is not used in backwash only applications.

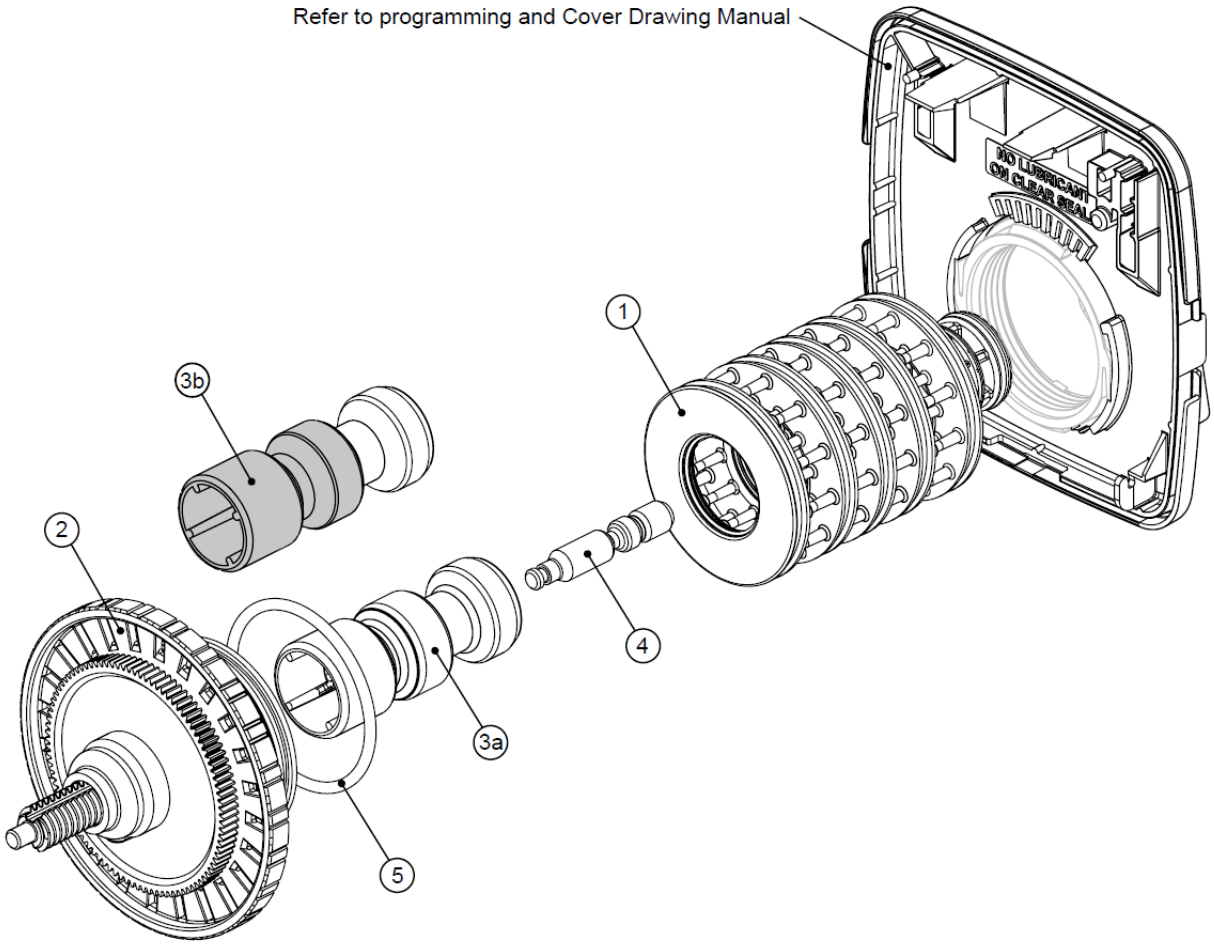

Twin Transfer

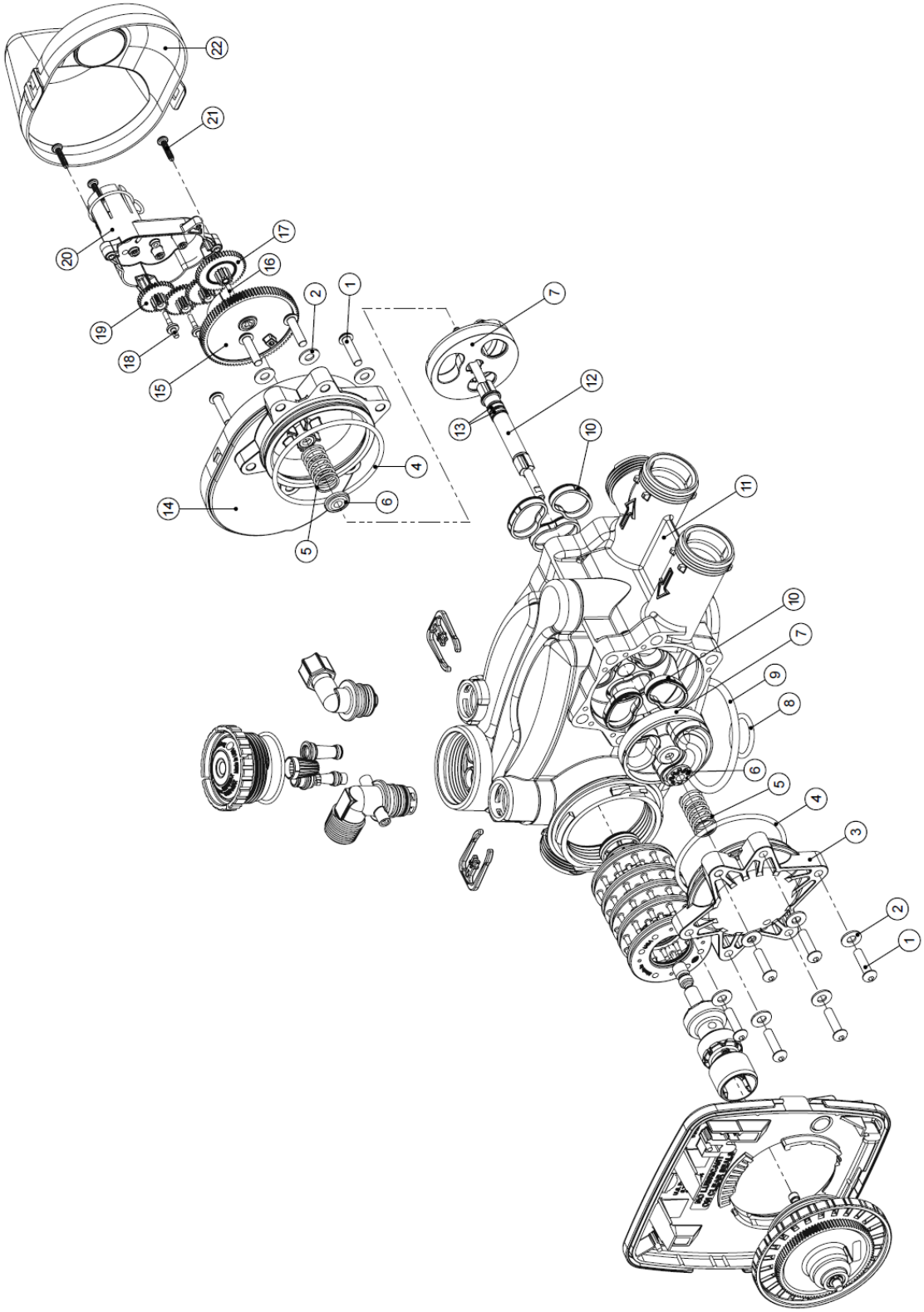

Drawing No.	Order No.	Description	Quantity
1	DW-3470-SO	SCREW BHC 1/4-20 X 1 SS	12
2	DW-3724-SO	WASHER FLAT SS 1/4	12
3	DW-4005-SO	T1 TRANSFER CAP ASY	1
4	35-0110-RB	O-RING 236	2
5	DW-4015-SO	T1 TRANSFER SPRING	2
6	DW-4014-SO	T1 TRANSFER SPRING SUPPORT	2
7	103-0009-XX	T1 ROTOR DISK ASY	2
8	35-0108-RB	O-RING 215 (DISTRIBUTOR TUBE)	1
9	35-0107-RB	O-RING 337	1
10	104-0042-XX	T1 TRANSFER SEAL	6
11	N.A.	T1 BODY SFT WTR REGEN	1
12	55-0049-XX	T1 TRANSFER DRIVE SHAFT ASY	1
13	35-0111-RB	O-RING 110	2
14	DW-4006-SO	T1 TRANSFER DRIVE CAP ASY	1
15	DW-4011-SO	T1 TRANSFER DRIVE GEAR ASY	1
16	DW-4012-SO	T1 TRANSFER DRIVE GEAR AXLE	1
17	DW-4013-SO	T1 TRANSFER REDUCTION GEAR	1
18	DW-3264-SO	WS2H BYPASS REDUCTION GEARAXLE	3
19	DW-3110-SO	DCS7 DRIVE REDUCING GEAR 12X36	3
20	73-0041-XX	WS1.5&2ALT/2BY REDUCGEARCVRASY	1
21	DW-3592-SO	SCREW #8-1 PHPN T-25 SS	3
22	DW-4049-SO	T1 COVER ASSEMBLY	1
NOT SHOWN	DW-4043-SO	T1 TRANSFER MOTOR ASY	1
NOT SHOWN	DW-3151-SO	WS1 NUT 1 QC	1
NOT SHOWN	DW-4055-SO	TWIN TANK METER ASY	1
NOT SHOWN	DW-4017-SO	T1 INTERCONNECT FITTING ASY	1
NOT SHOWN	DW-1400-SO	1191 IN/OUT HEAD	1

***THIS WATER METER SHOULD NOT BE USED AS THE PRIMARY MONITORING DEVICE FOR CRITICAL OR HEALTH EFFECT APPLICATIONS.**

Injector Cap, Injector Screen, Injector, Plug and O-Ring

Drawing No.	Order No.	Description	Quantity
1	DW-3176-SO	INJECTOR CAP	1
2	DW-3152-SO	O-RING 135	1
3	DW-3177-SO	INJECTOR SCREEN CAGE	1
4	DW-3010-ZSO	DCS7 INJECTOR ASY Z PLUG	1
5	DW-3010-ASO	DCS7 INJECTOR ASY A BLACK	1
	DW-3010-BSO	DCS7 INJECTOR ASY B BROWN	
	60-0144-XX	DCS7 INJECTOR ASY C VIOLET	
	60-0132-XX	DCS7 INJECTOR ASY D RED	
	60-0134-XX	DCS7 INJECTOR ASY E WHITE	
	60-0131-XX	DCS7 INJECTOR ASY F BLUE	
	60-0143-XX	DCS7 INJECTOR ASY G YELLOW	
	60-0125-XX	DCS7 INJECTOR ASY H GREEN	
	60-0126-XX	DCS7 INJECTOR ASY I ORANGE	
	60-0127-XX	DCS7 INJECTOR ASY J LIGHT BLUE	
	60-0145-XX	DCS7 INJECTOR ASY K LIGHT GREEN	
Not Shown	DW-3170-SO	O-RING 011	*
Not Shown	DW-3171-SO	O-RING 013	*

* The injector plug and the injector each contain one 011 (lower) and 013 (upper) o-ring.

For backwash only units injector *plugs* (DW-3010-ZSO) are located in both holes.

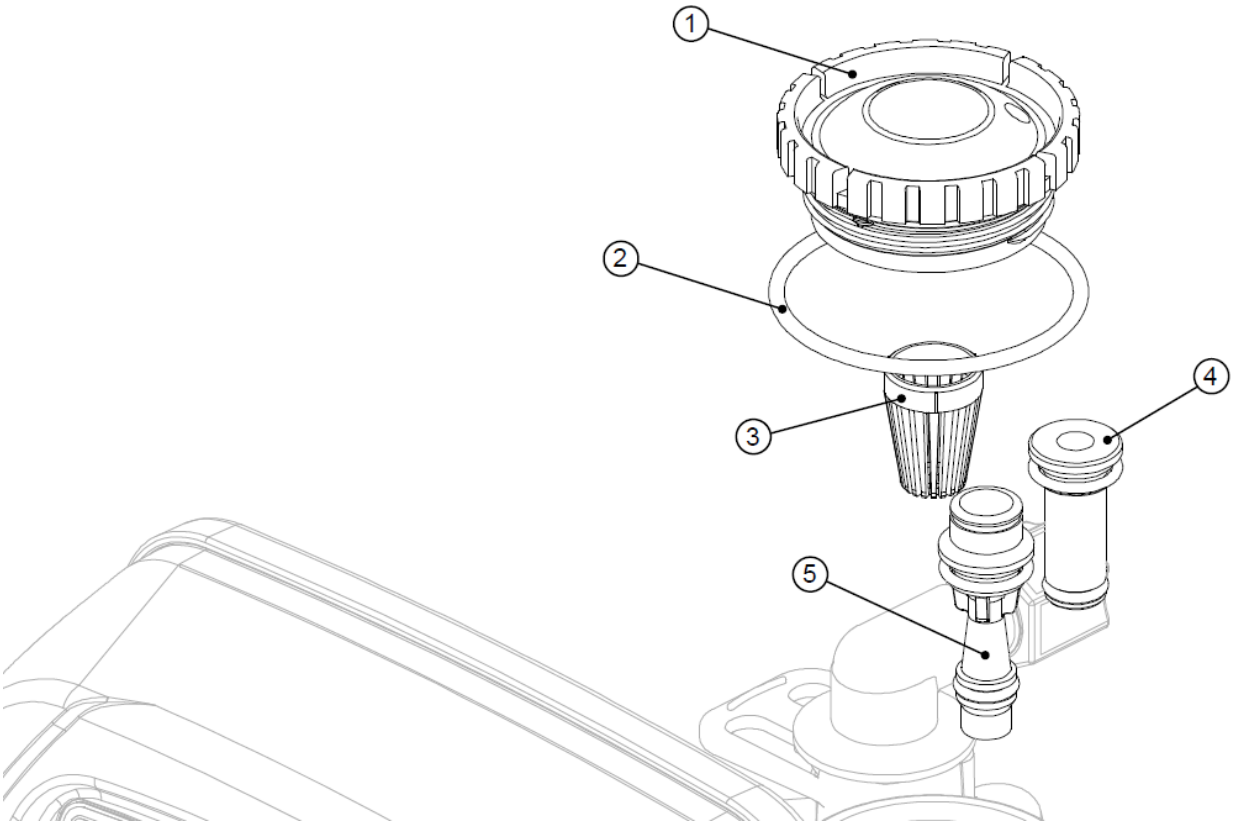

Injector Order Information

		Typical Tank Diameter	
Injector Order Number	Injector Color	Down WS1 & WS1.25	Up*
DW-3010-ASO	Black	6"	8"
DW-3010-BSO	Brown	7"	9"
60-0144-XX	Violet	8"	10"
60-0132-XX	Red	9"	12"
60-0134-XX	White	10"	13"
60-0131-XX	Blue	12"	14"
60-0143-XX	Yellow	13"	16"
60-0125-XX	Green	14"	18"
60-0126-XX	Orange	16"	21"
60-0127-XX	Light Blue	18"	
60-0145-XX	Light Green	21"	

Actual tank size used may vary depending on the design and application of the system. Tank diameter is an approximation for the following:

1. downflow softener using standard mesh synthetic cation exchange media regenerating with sodium chloride.

2. upflow softener using standard mesh synthetic cation exchange media regenerating with sodium chloride, an inlet water pressure of 30 to 50 psi (2.1 to 3.4 bar) and water temperature of 60°F (15.6°C) water or warmer. Higher pressures or lower temperatures would need smaller injectors to avoid excessive of lifting the bed.

*Not applicable for DCS7 control valves.

Refill Flow Control Assembly and Refill Port Plug

Drawing No.	Order No.	Description	Quantity
1	DW-3195-SO	DCS7 Refill Port Plug Asy	This part is required for backwash only systems
2	DW-4615-SO	Elbow Locking Clip	1
3*	N.A.	Polytube insert 3/8”	1
4*	N.A.	Nut 3/8”	1
5*	N.A.	Elbow Cap 3/8”	1
6*	N.A.	0-ring 019	1
7*	N.A.	DCS7 RFC Retainer Asy (0.5 gpm)	1
8*	N.A.	DCS7 RFC	1
9	10-0154-XX	DCS7 Brine Elbow Asy w/RFC 3/8"	1
Not Shown	DW-3552-SO	DCS7 Brine Elbow Asy w/RFC 1/2"	Option
Not Shown	N.A.	Elbow ½” with nut and insert	Option

** Can be ordered as assembly only 10-0154-XX*

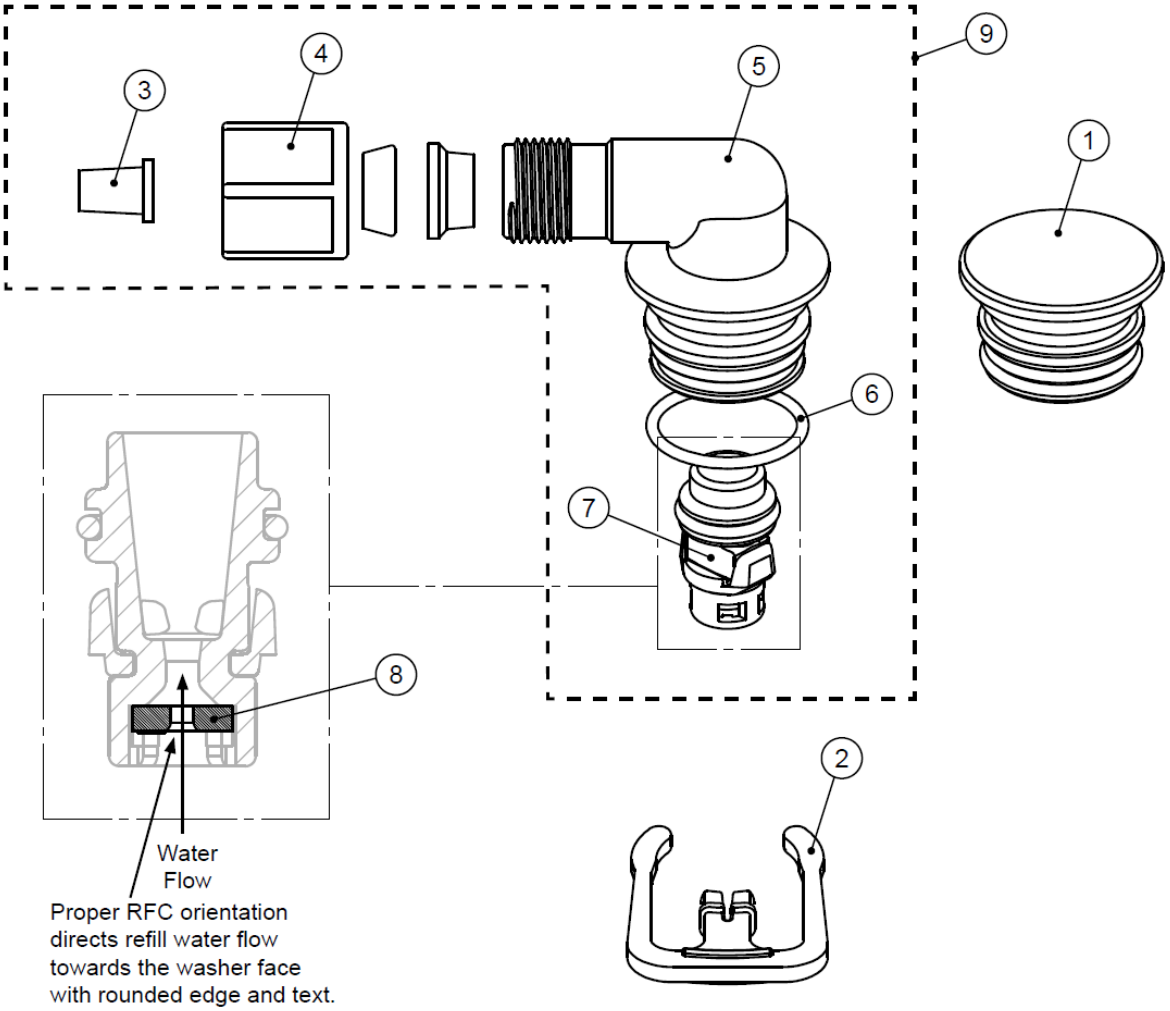

Drain Line – 3/4"

Drawing No.	Order No.	Description	Quantity
1	DW-4615-SO	Elbow Locking Clip	1
2	N.A.	Polytube insert 5/8	Option
3	DW-3192-SO	DCS7 Nut ¾ Drain Elbow	Option
4*	N.A.	DCS7 Drain Elbow ¾ Male	1
5*	N.A.	O-ring 019	1
6*	N.A.	DCS7 DLFC Retainer ASY	1
7	16-0162-XX	DCS7 DLFC 0.7 gpm for ¾	One DLFC must be used if ¾ fitting is used
	16-0163-XX	DCS7 DLFC 1.0 gpm for ¾	
	16-0164-XX	DCS7 DLFC 1.3 gpm for ¾	
	16-0165-XX	DCS7 DLFC 1.7 gpm for ¾	
	16-0153-XX	DCS7 DLFC 2.2 gpm for ¾	
	16-0166-XX	DCS7 DLFC 2.7 gpm for ¾	
	16-0167-XX	DCS7 DLFC 3.2 gpm for ¾	
	16-0149-XX	DCS7 DLFC 4.2 gpm for ¾	
	16-0168-XX	DCS7 DLFC 5.3 gpm for ¾	
	16-0169-XX	DCS7 DLFC 6.5 gpm for ¾	
	16-0150-XX	DCS7 DLFC 7.5 gpm for ¾	
	16-0156-XX	DCS7 DLFC 9.0 gpm for ¾	
	16-0170-XX	DCS7 DLFC 10.0 gpm for ¾	
** Can be ordered as assembly only 10-0153-XX*			

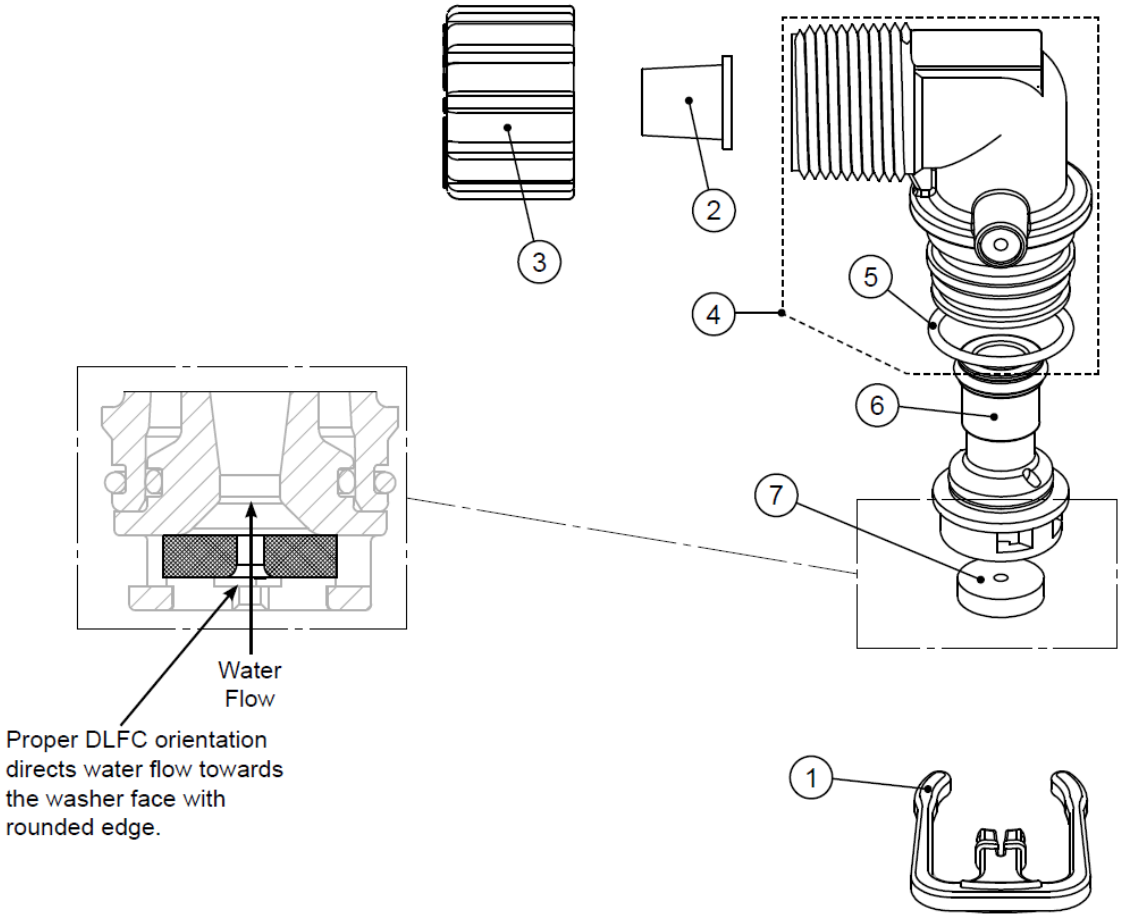

Drain Line - 1”

Drawing No.	Order No.	Description	Quantity
1	DW-4615-SO	Elbow Locking Clip	1
2	14-0070-XX	DCS7 Drain FTG 1 Straight	1
3*	N.A.	DCS7 Drain FTG Body 1	1
4*	N.A.	DCS7 Drain FTG Adapter 1	1
5*	N.A.	0-ring 019	1
6*	N.A.	DCS7 Split Ring	1
7*	N.A.	DCS7 Nut 1” QC	1
8*	N.A.	O-ring 215	1
9	16-0157-XX	DCS7 DLFC 9.0 gpm for 1	One DLFC must be used if 1” fitting is used
	16-0158-XX	DCS7 DLFC 10.0 gpm for 1	
	16-0151-XX	DCS7 DLFC 11.0 gpm for 1	
	16-0159-XX	DCS7 DLFC 13.0 gpm for 1	
	16-0154-XX	DCS7 DLFC 15.0 gpm for 1	
	16-0155-XX	DCS7 DLFC 17.0 gpm for 1	
	16-0160-XX	DCS7 DLFC 20.0 gpm for 1	
	16-0161-XX	DCS7 DLFC 25.0 gpm for 1	

** Can be ordered as assembly only 14-0070-XX*

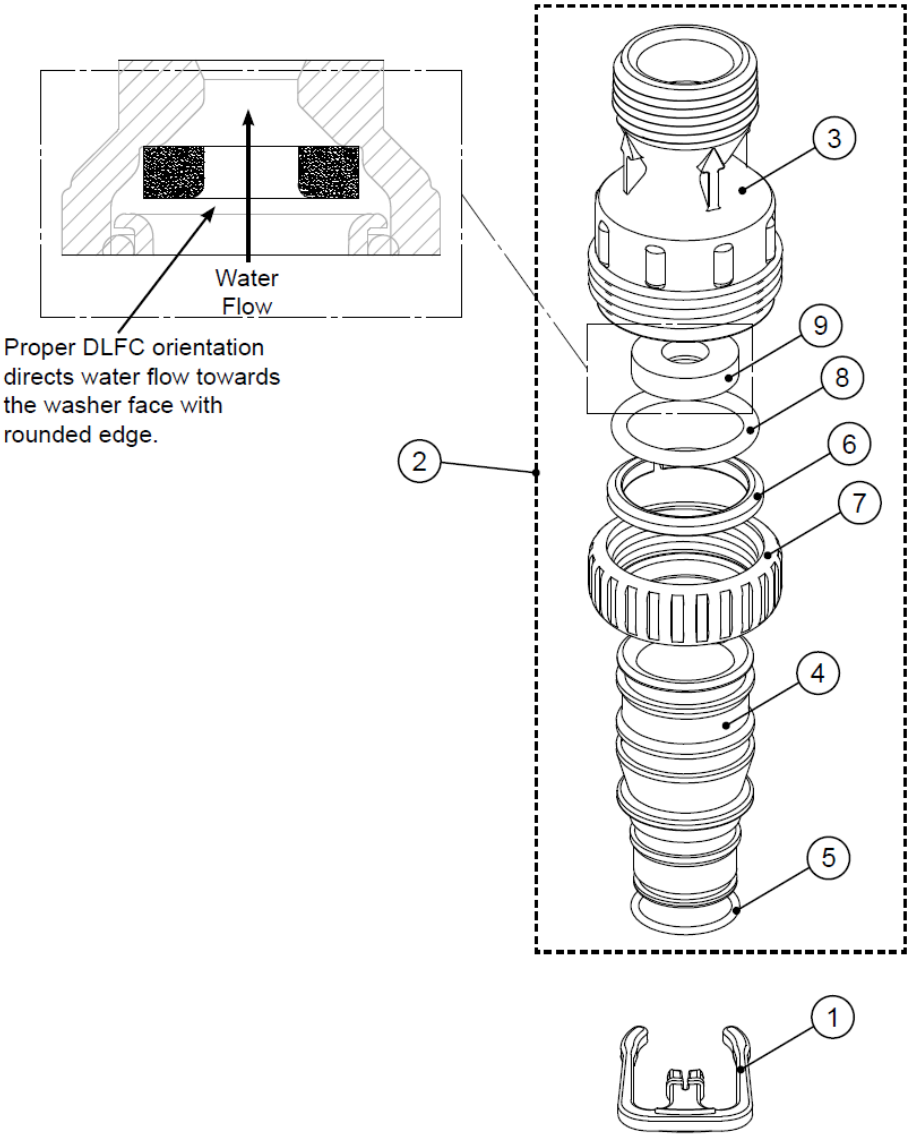

Interconnect Fitting Assembly

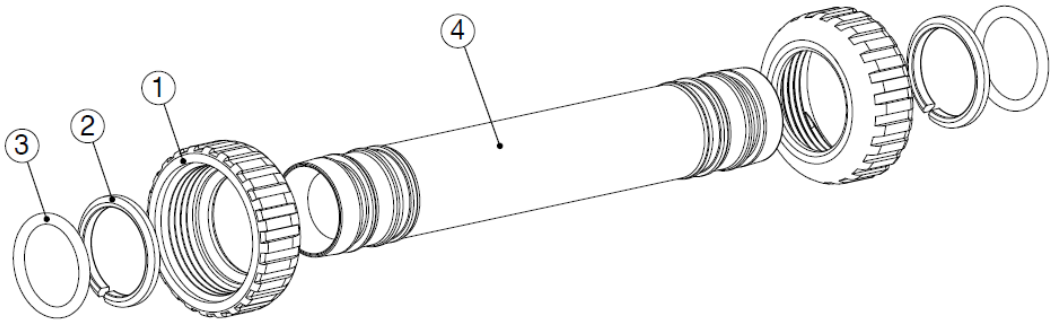

Drawing No.	Order No.	Description	Quantity
1	DW-3151-SO	WS1 NUT 1" QUICK CONNECT	4
2	DW-3150-SO	WS1 SPLIT RING	4
3	DW-3105-SO	O-RING 215	4
4	DW-4017-SO	T1 INTERCONNECT FITTING	2

Fitting Installation Instructions:

- Installation fittings are designed to accommodate minor plumbing misalignments, but are not designed to support the weight of a system or the plumbing.
- Slide nut on first, then the split ring and o-ring.
- Hand tighten the nut only.

The DW-4017-SO can be used on tanks up to 10" in diameter. **If using 12" diameter tanks or larger PVC SCH 80 1-1/4 PIPE must be used and combined with two DW-3007-SO WS1 FTG 1.25&1.5 PVC SLVNT ASY. The PVC SCH 80 1-1/4 PIPE can be cut to the desired length.**

D1400 1191 In/Out Head

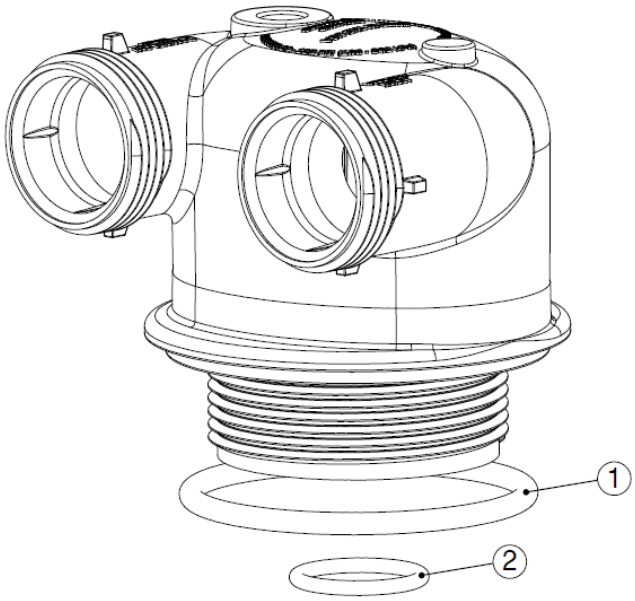

Drawing No.	Order No.	Description	Quantity
1	35-0107-RB	O-RING 337	1
2	DW-3105-SO	O-RING 215 (DISTRIBUTOR TUBE)	1

11. Troubleshooting

Problem	Possible Cause	Solution
No Display on PC Board	No power at electric outlet	Repair outlet or use working outlet
	Control valve power adapter not plugged into outlet or power cord end not connected to PC board connection	Verify that cord is plugged in and that proper voltage is being delivered to PC board connection
	Improper power supply	Verify proper voltage is being delivered to PC board
	Defective power adapter	Replace Power Adapter
	Defective PC Board	Replace PC Board
PC Board does not display correct time of day	Power Adapter Plugged into electric outlet controlled by light switch	Use uninterrupted outlet
	Tripped breaker switch and/ or GFI switch	Reset breaker switch and/ or GFI switch
	Power outage	Reset time of day. If PC board has battery back-up present, the battery may be depleted. See page 17 for instructions on how to change the time. Replace the battery.
	Defective PC board	Replace PC Board, reprogram PC Board
Display does not indicate that water is flowing. Refer to instructions for how the display indicates water is flowing (pg 13)	Bypass valve in bypass position (Figure 23)	Turn bypass handles to place bypass in service position
	Meter is not connected to meter connection on PC board	Connect meter to three pin connection labeled METER on PC board
	Restricted/stalled meter turbine	Remove meter and check for rotation or foreign material
	Meter cable wires are not installed securely into three pin connector	Verify meter cable wires are installed securely into three pin connector labeled METER
	Defective meter	Replace meter
	Defective PC Board	Replace PC Board, reprogram PC Board
Control valve regenerates at wrong time of day	Power outage	Reset time of day. If PC board has battery back-up present, the battery may be depleted. See front cover and drive assembly drawing for instructions.
	Time of day not set correctly	Reset to correct time of day
	Time of regeneration set incorrectly	Reset regeneration time
	Control valve set at “on 0” (immediate regeneration)	Check programming setting and reset to dELy (for a delayed regen time)
	Control valve set at “dELy” (delayed and/or immediate)	Check programming setting and reset to NORMAL (for a delayed regen time)

11. Troubleshooting (2)

Problem	Possible Cause	Solution
Time of day flashes on and off	Power outage	Reset time of day. If PC board has battery back-up present, the battery may be depleted. See page 17 for instructions on how to change the time. Replace the battery.
Control valve does not regenerate automatically when the REGEN button is depressed and held.	Broken drive gear or drive cap assembly	Replace drive gear or drive cap assembly
	Broken Piston Rod	Replace piston rod
	Defective PC Board	Replace PC Board
Control valve does not regenerate automatically but does when the REGEN button is depressed and held.	Bypass valve in bypass position	Turn bypass handles to place bypass in service position
	Meter is not connected to meter connection on PC board	Connect meter to three pin connection labeled METER on PC board
	Restricted/stalled meter turbine	Remove meter and check for rotation or foreign material
	Incorrect programming	Check for programming error
	Meter cable wires are not installed securely into three pin connector	Verify meter cable wires are installed securely into three pin connector labeled METER
	Defective meter	Replace meter
	Defective PC Board	Replace PC Board
Hard or untreated water is being delivered	Bypass valve is open or faulty	Fully close bypass valve or replace
	Media is exhausted due high water usage.	Check program settings or diagnostics for abnormal water usage
	Meter not registering	Remove meter and check for rotation or foreign materials
	Water quality fluctuation	Test water and adjust program values accordingly
	No or low level of salt in brine tank	Add proper amount of salt to tank
	Control valve fails to draw in brine	Refer to pg. 23.
	Insufficient water level in brine tank	Check refill setting in programming. Check refill flow control for restrictions or debris and clean or replace
	Damage seal/stack assembly	Replace seal/stack assembly
	Control valve body type and piston type mix matched	Verify proper control valve body type and piston type match
	Fouled resin	Replace resin

11. Troubleshooting (3)

Problem	Possible Cause	Solution
Control valve uses too much brine	Improper refill settings	Check refill settings (7.A)
	Improper program settings	Check program setting to make sure they are specific to the water quality and application needs
	Control valve regenerates frequently	Check for leaking fixtures that may be exhausting capacity or system is undersized
Residual salt is being delivered to service	Low waste pressure	Check incoming water pressure. Water pressure must remain at minimum of 25 psi
	Incorrect injector size	Replace injector with correct size for the application
	Restricted drain line	Check drain line for restriction or debris and clean
Excessive water in brine tank	Improper program settings	Check refill setting
	Plugged injector	Remove injector and clean or replace
	Drive cap assembly not tightened in properly	Re-tighten the drive cap assembly
	Damaged seal/stack assembly	Replace seal/stack
	Restricted or kinked drain line	Check drain line for restrictions or debris and or un-kink drain line
	Plugged backwash flow controller	Remove backwash flow controller and clean or replace
	Missing refill flow controller	Replace refill flow controller
Control valve fails to draw in brine	Injector is plugged	Remove injector and clean or replace
	Faulty regenerant piston	Replace regenerant piston
	Brine line connection leak	Inspect brine line for air leak
	Drain line restriction or debris cause excess back pressure	Inspect drain line and clean to correct restriction
	Drain line too long or too high	Shorten length or height
	Low water pressure	Check incoming water pressure. Water pressure must remain at minimum of 25 psi
Water running to drain	Power outage during regeneration	Upon power being restored control will finish the remaining regeneration time. Reset time of day. If PC board has battery back-up present the battery may be depleted. See Front Cover and Drive Assembly drawing for instructions
	Damage seal/stack assembly	Replace seal/stack assembly
	Piston assembly failure	Replace piston assembly
	Drive cap assembly not tightened properly	Re-tighten the drive cap assembly

12. Control Error Codes

Problem	Possible Cause	Solution
E1, Err-1001, Err-101 = **Control unable to sense motor movement**	Motor not inserted full to engage pinion, motor wires broken or disconnected	Disconnect power, make sure motor is fully engaged, check for broken wires, and make sure two-pin connector on motor is connected to the two pin connection on the PC board labeled MOTOR. Press NEXT and REGEN buttons for 3 seconds to resynchronize software with piston position or disconnect power supply from PC board for 5 seconds and then reconnect.
	PC board not properly snapped into drive bracket	Properly snap PC board into drive bracket and then press NEXT and REGEN buttons for 3 seconds to resynchronize software with piston position or disconnect power supply from PC board for 5 seconds and then reconnect.
	Missing reduction gears	Replace missing gears
E2, Err-1002, Err-102 = **Control valve motor ran too short and was unable to find the next cycle position and stalled**	Foreign material is lodged in control valve	Open up control valve and pull out piston assembly and seal/stack assembly for inspection. Press NEXT and REGEN buttons for 3 seconds to resynchronize software with piston position or disconnect power supply from PC board for 5 seconds and then reconnect.
	Mechanical binding	Check piston assembly and seal/stack assembly, check reduction gears, check drive bracket and main drive gear interface. Press NEXT and REGEN buttons for 3 seconds to resynchronize software with piston position or disconnect power supply from PC board for 5 seconds and then reconnect.
	Main drive gear too tight	Loosen main drive gear. Press NEXT and REGEN buttons for 3 seconds to resynchronize software with piston position or disconnect power supply from PC board for 5 seconds and then reconnect.
	Improper voltage being delivered to PC board	Verify that proper voltage is being supplied. Press NEXT and REGEN buttons for 3 seconds to resynchronize software with piston position or disconnect power supply from PC board for 5 seconds and then reconnect.

12. Control Error Codes (2)

Problem	Possible Cause	Solution
E3, Err-1003, Err-103 = **Control valve motor ran too long and was unable to find the next cycle position and stalled**	Motor failure during a regeneration	Check motor connections. Press NEXT and REGEN buttons for 3 seconds to resynchronize software with piston position or disconnect power supply from PC board for 5 seconds and then reconnect.
	Foreign material built up on piston and stack assemblies creating friction and drag enough to time out motor	Replace piston and seal/stack assemblies. Press NEXT and REGEN buttons for 3 seconds to resynchronize software with piston position or disconnect power supply from PC board for 5 seconds and then reconnect.
	Drive bracket not snapped in properly that reduction gears and drive gear do not interface	Snap drive bracket in properly. Press NEXT and REGEN buttons for 3 seconds to resynchronize software with piston position or disconnect power supply from PC board for 5 seconds and then reconnect.
E4, Err-1004, Err-104 = **Control valve motor ran too long and timed out trying to reach home position**	Drive bracket not snapped in properly that reduction gears and drive gear do not interface	Snap drive bracket in properly. Press NEXT and REGEN buttons for 3 seconds to resynchronize software with piston position or disconnect power supply from PC board for 5 seconds and then reconnect.
Err-1006, Err-106, Err-116 = **MAV/SEPS/NHBP/AUX MAV valve motor ran too long and unable to find the proper park position.** **MAV = Motorized Alternating Valve** **SEPS = Separate Source** **NHBP = No Hard Water Bypass** **AUX MAV = Auxiliary MAV**	Control valve programmed for ALT A or B, NHBP, SEPS, or AUX MAV without having a MAV or NHBP valve attached to operate that function	Press NEXT and REGEN buttons for 3 seconds to resynchronize software with piston position or disconnect power supply from PC board for 5 seconds and then reconnect.
	MAV/NHBP motor wire not connected to PC board	Connect MAV/NHBP motor to PC board two-pin connection labeled DRIVE. Press NEXT and REGEN buttons for 3 seconds to resynchronize software with piston position or disconnect power supply from PC board for 5 seconds and then reconnect.
	MAV/NHBP motor not fully engaged with reduction gears	Press NEXT and REGEN buttons for 3 seconds to resynchronize software with piston position or disconnect power supply from PC board for 5 seconds and then reconnect.
	Foreign material built up on piston and stack assemblies creating friction and drag enough to time out motor	Replace piston and seal/stack assemblies. Press NEXT and REGEN buttons for 3 seconds to resynchronize software with piston position or disconnect power supply from PC board for 5 seconds and then reconnect.

12. Control Error Codes (3)

Problem	Possible Cause	Solution
Err-1007, Err-107, Err-117 **= MAV/SEPS/NHBP/AUX MAV valve motor ran too short (stalled) while looking the proper park position.** **MAV = Motorized Alternating Valve** **SEPS = Separate Source** **NHBP = No Hard Water Bypass** **AUX MAV = Auxiliary MAV**	Foreign material is lodged in MAV/NHBP valve	Check motor connections. Press NEXT and REGEN buttons for 3 seconds to resynchronize software with piston position or disconnect power supply from PC board for 5 seconds and then reconnect.
	Mechanical binding	Check piston and seal/stack assemblies, check reduction gears, drive gear interface and check MAV/NHBP black drive pinion on motor for jammed into motor body. Press NEXT and REGEN buttons for 3 seconds to resynchronize software with piston position or disconnect power supply from PC board for 5 seconds and then reconnect.